2002

MITSUBISHI ELECTRIC

Service Manual

PROJECTION TELEVISION
V21 / V21+ / V21++ CHASSIS

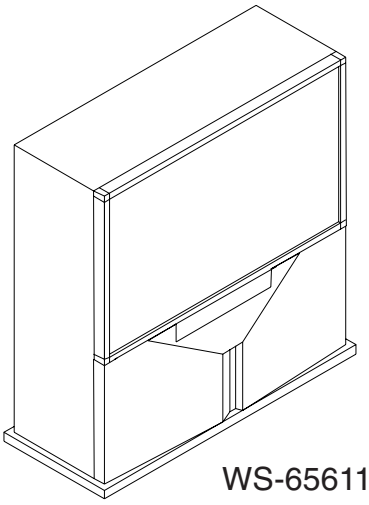

WS-65611

V21 MODELS	V21+ MODELS	V21++ MODELS
WS-48511	WS-65611	WS-55711
WS-55511		WS-65711
WS-65511		WS-65712
WS-B55		WS-73711

CAUTION:
Before servicing this chassis, it is important that the service person read the "SAFETY PRECAUTIONS" and "PRODUCT SAFETY NOTICE" contained in this manual.

SPECIFICATIONS

- **Power Input** : AC 120V, 60Hz
- **Power Usage** : 275W (All but WS-73711)
  300W (WS-73711 only)
- **Frequency Range** : VHF 54 ~ 470MHz
  UHF 470 ~ 806MHz
- **Antenna Input** : VHF/UHF 75Ω unbalanced
  2 - NTSC
  1 - ATV/QAM
- **CRT Size** : [7 inches]
  : [9 inches] WS-73711 only
- **High Voltage** : 32.0kV (at 0A)
- **Cabinet Weight and Demensions**

Model	Weight	Height	Width	Depth
WS-48511	175.5 lbs.	49"	44.5"	24"
WS-55511	238 lbs.	50.3"	50.6"	28"
WS-55711	266 lbs.	50.3"	50"	28"
WS-65511	337 lbs.	61.9"	59"	28.1"
WS-65611	336.5 lbs	61.9"	59"	28.1"
WS-65711	356 lbs	61.6"	58.2"	28"
WS-65712	251 lbs.	61.7"	58.2"	28.4"
WS-73711	410 lbs	65.7"	65.2"	30"
WS-B55	238 lbs.	50.3"	50.6"	28"

- Weight and dimensions shown are approximate.
- Design specifications are subject to change without notice.
- AC-3® is a registered trademark of Dolby Laboratories, Inc.

- **Speakers (8 Ohms 10W)**
  [WS-48511] : 2 - 5" round
  [WS-B55 / WS-55511 / WS-65511 / WS-65611]
  : 2 - 6" round
  [WS-55711 / WS-65711 / WS-73711]
  : 2 - 6.5" round, 2 - 3" tweeters
  [WS-65712] : 2 - 7" oval, 2 - 3" tweeters
- **Input Level** : VIDEO IN JACK (RCA Type)
  1.0Vp-p 75Ω unbalanced
  : AUDIO IN JACK (RCA Type)
  -4.7dBm 43kΩ unbalanced
  : S-VIDEO IN JACK
  (Y/C separate type)
  Y:1.0 Vp-p C:0.286Vp-p(BURST)
  75Ω unbalanced
  : COMP / Y, Cr, Cb (RCA Type)
  Y: 1.0 Vp-p Cr, Cb: 700mVp-p
  : ATV / Y(G), Pr(R), Pb(B), H, V
  Y: 1.0Vp-p with sync 75Ω (BNC)
  Pr, Pb: 700mV 75Ω
  H, V: 3.0Vp-p 75Ω
  : VGA / R,G,B,V,H (15 pin D)
- **Output Level** : VIDEO OUT JACK (RCA Type)
  1.0Vp-p 75Ω unbalanced
  : AUDIO OUT JACK (RCA Type)
  -4.7dBm 4.7kΩ unbalanced
- **Digital Interface**
  : IEEE-1394 I/O Jacks
  : AC-3® Digtal Audio Output

MITSUBISHI DIGITAL ELECTRONICS AMERICA, INC.
9351 Jeronimo Road, Irvine, CA 92618-1904
Copyright © 2002 Mitsubishi Digital Electronics America, Inc.
All Rights Reserved

CONTENTS

INTRODUCTION **5**
PRODUCT SAFETY NOTICE **5**
SAFETY PRECAUTIONS **6**

DISASSEMBLY
WS-48511 Cabinet Front Disassembly 7
WS-48511 Cabinet Rear Disassembly 8
WS-B55 / WS-55511 / WS-65511 Cabinet Front Disassembly 9
WS-65611 Cabinet Front Disassembly 10
WS-55711 / WS-65711 / WS-73711 Cabinet Front Disassembly 11
WS-B55 / WS-55511 / WS-65511 / WS-65611 / WS-55711 / WS-65711 / WS-73711
Cabinet Rear Disassembly 12
WS-65712 Cabinet Front Disassembly 13
WS-65712 Cabinet Rear Disassembly 14

SERVICING THE LENTICULAR SCREEN AND FRESNEL LENS
Lenticular Screen and Fresnel Lens Removal **15**
WS-48511 15
WS-B55 / WS-55511 / WS-65511 16
WS-55711 / WS-65611 / WS65711 / WS-65712 / WS-73711 17
Lenticular Screen and Fresnel Lens Installation **18**

SERVICING THE DIAMONDSHIELDS™
DiamondShield ™ Removal & Installation 19

CABINET SEPARATION (65 and 73 inch)
WS-65712 20
WS-65511 21
WS-65611 / WS-65711 / WS-73711 21

SERVICING PCBs
Chassis and DM Module Removal 22
PCB Locations 23
Main Components Location 23
DM Module Main Components Location 24

CRT REPLACEMENT
CRT Removal 25
CRT Installation 26

ELECTRICAL ADJUSTMENTS
Test Equipment 28
Initial Setup 29
LED Indicator Diagnostics 30
Remote Control Operational Mode 30
Circuit Adjustment Mode 31
On Screen Display Position Adjustment Mode 32
Convergence Adjustment Mode 32
E2PROM Replacement 34
Adjustment Items List 34
Adjustment Test Points 37
Adjustment Procedures 38
Audio Circuit 38
High Voltage Regulation 39
Main/Sub Y Level 39
Side by Side Sub Picture Tint 40
Side by Side Sub Picture Color 40

CRT Cutoff 41
White Balance (NTSC) 41
White Balance (HD) 42
Cb, Cr Offset 42
Black Level 43
Sub Contrast 43
Dynamic Focus Preset 44
Lens Focus 44
Electrostatic Focus & Alignment Magnet Adjustment 45
On Screen Display Character Position 45
Deflection/Convergence Geometry Presets 46
Deflection Circuit Geometry Adjustments 47
Convergence Circuit Geometry Adjustments 48
Centering and Static Convergence 49
Coarse Convergence Adjustments 50
Fine Convergence Adjustments 51

CHIP PARTS REPLACEMENT 52

REPLACEMENT PARTS
Parts Ordering 53
Critical and Warranty Parts Designation 53
Parts Tolerance Codes 53
Quick Reference List 54
Service Parts List 55
Screen Parts List 70

CIRCUITRY BLOCK DIAGRAMS
Standby Supplies Regulator 74
Switched Supplies Regulator 75
DM Power Supply 76
Video / Color A/V Switch Circuit 77
Video / Color Signal Path 78
Sync Signal Path 79
Deflection / HV 80
X-Ray Protect 80
Sound Circuit 81
Convergence 82
Control Circuitry 83

Section 2 .... Schematic Diagrams

SCHEMATIC DIAGRAMS
Overall Block Diagram 1
PCB-MAIN 2
PCB-POWER 3
PCB-TERMINAL 4
PCB-SIGNAL-1 (AV I/O) 5
PCB-SIGNAL-2 (MICRO) 6
PCB-SIGNAL-3 (VIDEO / CHROMA) 7
PCB-3DYC 8
PCBs-CONV GEN / JUNGLE 9
PCBs - CRT / CONTROL / SVM / DBF / DM POWER 10
PCB-2HDW-1 11
PCB-2HDW-2) 12
PCB-2HDW-3 13
PCB LAYOUT DIAGRAMS 14

INTRODUCTION

This service manual provides service instructions for the V21, V21+ and V21++ PTV chassis types. The specific models for each chassis type are listed below. Service personnel should read this manual thoroughly before servicing these chassis.

V21 Chassis	V21+ Chassis	V21++ Chassis
WS-48511	WS-65611	WS-55711
WS-55511		WS-65711
WS-65511		WS-65712
WS-B55		WS-73711

This service manual includes:

1. Assembly and disassembly instructions for the front and rear cabinet components.
2. Servicing of the Lenticular Screen and Fresnel Lens.
3. Servicing printed circuit boards (PCBs).
4. CRT replacement procedure.
5. Electrical adjustments.
6. Chip parts replacement procedures.
7. Circuit path diagrams.

The parts list section of this service manual includes:

1. Cabinet and screen parts.
2. Electrical parts.

Schematic and block diagrams of the above listed models are included in this service manual for better understanding of the circuitry. PCB drawings are also included for easy location of parts and test points.

PRODUCT SAFETY NOTICE

Many electrical and mechanical parts in television receivers have special safety related characteristics. These characteristics are often not evident from visual inspection nor can the protection afforded by them necessarily be obtained by using replacement components rated for higher voltage, wattage, etc.

Replacement parts which have special safety characteristics are identified in this service manual.

Electrical components having such features are identified by shading on the schematic diagram and by **bold type** in the parts list of this service manual. **The replacement for any safety part should be identical in value and characteristics.**

SAFETY PRECAUTIONS

NOTICE: Observe all cautions and safety related notes located inside the receiver cabinet and on the receiver chassis.

WARNING:

1. Operation of this receiver outside the cabinet or with the cover removed presents a shock hazard from the receiver's power supplies. Work on the receiver should not be attempted by anyone who is not thoroughly familiar with the precautions necessary when working on high voltage equipment.
2. Do not install, remove or handle the picture tubes in any manner unless shatterproof goggles are worn. People not so equipped should be kept away while the picture tube is being handled. Keep the picture tube away from the body while handling.
3. When service is required, observe the original lead dress. Extra precaution should be taken to assure correct lead dress in the high voltage area. Where a short-circuit has occurred, replace those components that indicate evidence of overheating.

X-Radiation warning

The surface of the cathode ray tubes (CRTs) may generate X-Radiation, so take proper precautions when servicing. It is recommended that a lead apron be used for shielding while handling the CRT. Use this method if possible.

When replacing the CRTs, use only the designated replacement part since it is a critical component with regard to X-Radiation. High voltage must be set as prescribed under the section titled Electrical Adjustments.

Leakage current check

Before returning the receiver to the customer, it is recommended that leakage current be measured according to the following methods.

1. *Cold Check*

   With the alternating current (AC) plug removed from the AC source, place a jumper across the two AC plug prongs. Connect one lead of an ohm meter to the AC plug and touch the other lead to each exposed metal part (i.e. antennas, handle bracket, metal cabinet, screw heads, metal overlay, control shafts, etc.), particularly any exposed metal part that has a return path to the chassis. The resistance of the exposed metal parts having a return path to the chassis **should be a minimum of 1Mega Ohm**. Any resistance below this value indicates an abnormal condition and requires corrective action.

2. *Hot Check ...Use the circuit shown below to perform the hot check test.*

   1. Keep switch S1 open and connect the receiver to the measuring circuit. Immediately after connection, and with the switching devices of the receiver in their operating positions, measure the leakage current for both positions of switch S2.
   2. Close switch S1, energizing the receiver. Immediately after closing switch S1, and with the switching devices of the receiver in their operating positions, measure the leakage current for both positions of switch S2. Repeat the current measurements of items 1 and 2 after the receiver has reached thermal stabilization. **The leakage current must not exceed 0.5 milliampere (mA).**

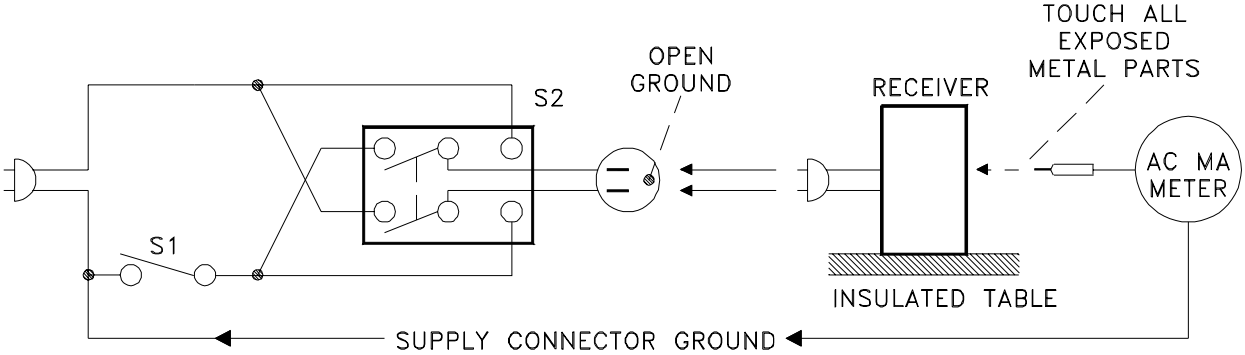

CABINET DISASSEMBLY (FRONT VIEW)

WS-48511

***Refer to the Parts List for Part Numbers**

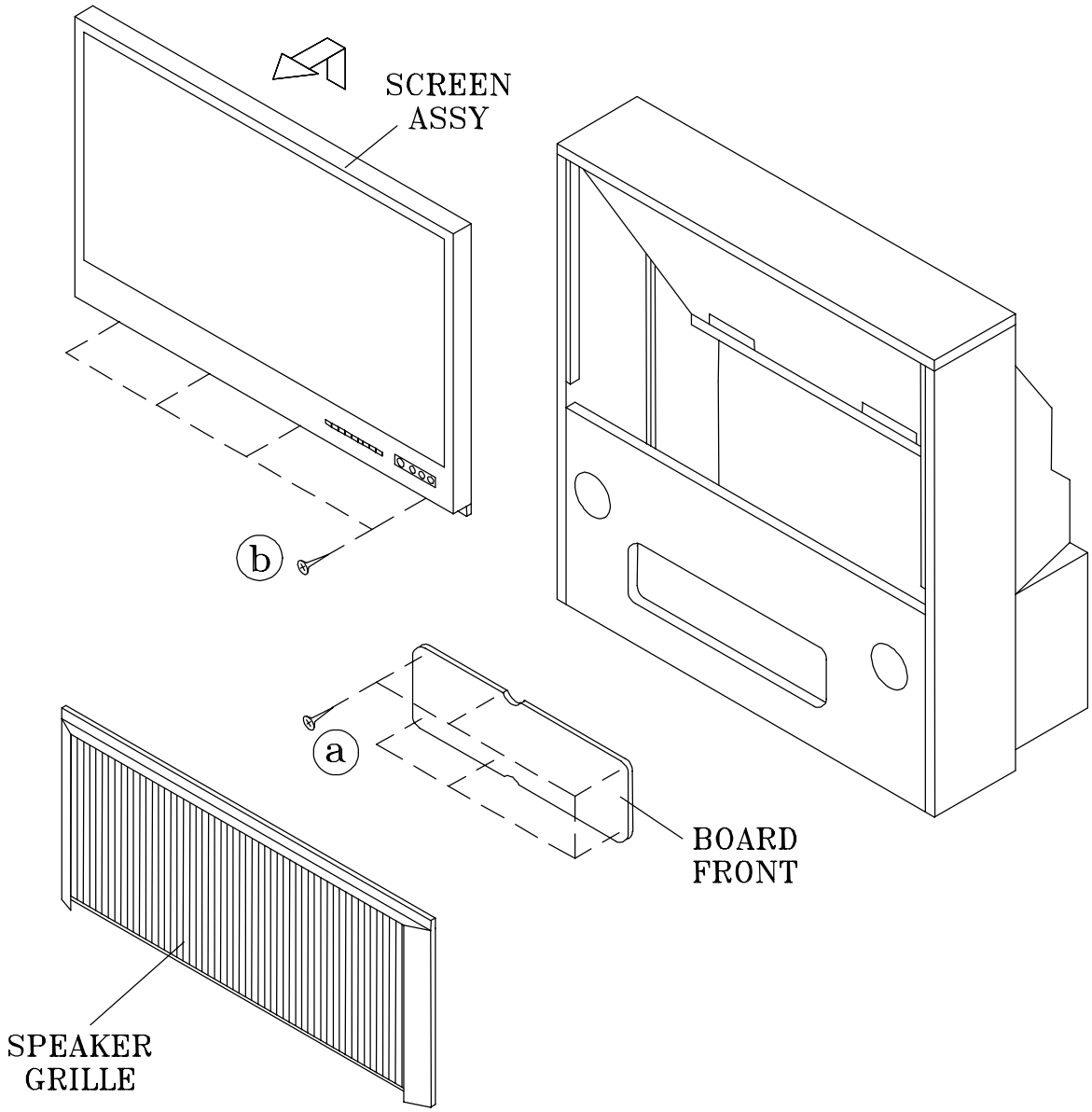

Front Cabinet Disassembly

1. Remove the Speaker Grille by pulling forward.
2. Remove the Board Front by removing screws (a).
3. Remove the screws (b) holding the Screen Assembly.
4. Lift the Screen Assembly up and away from the cabinet.

CABINET DISASSEMBLY (REAR VIEW)

WS-48511

***Refer to the Parts List for Part Numbers**

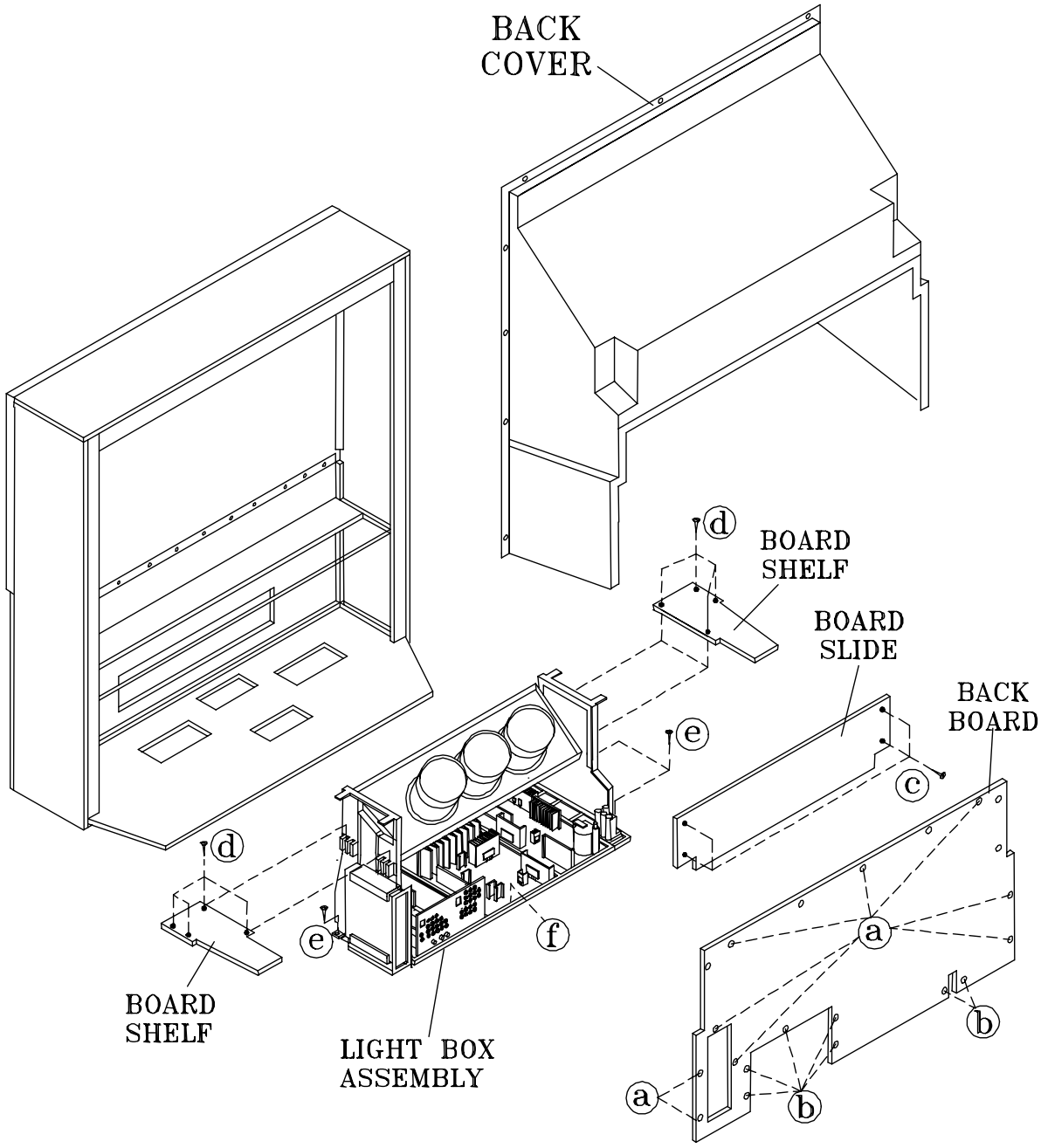

Rear Cabinet Disassembly

1. Remove the Back Board by removing screws (a)and (b)).
2. Remove 4 screws (c) securing the Board Slide.
3. Remove 4 screws (d) holding each Board Shelf.
4. Be certain that all cables and connectors between the Light Box Assembly and external items are disconnected (e.g. speaker plugs, etc.).
5. Remove 3 screws (c) and screw (f). Then slide the Light Box Assembly from the cabinet.

CABINET DISASSEMBLY (FRONT VIEW)

WS-B55 / WS-55511 / WS-65511

***Refer to the Parts List for Part Numbers**

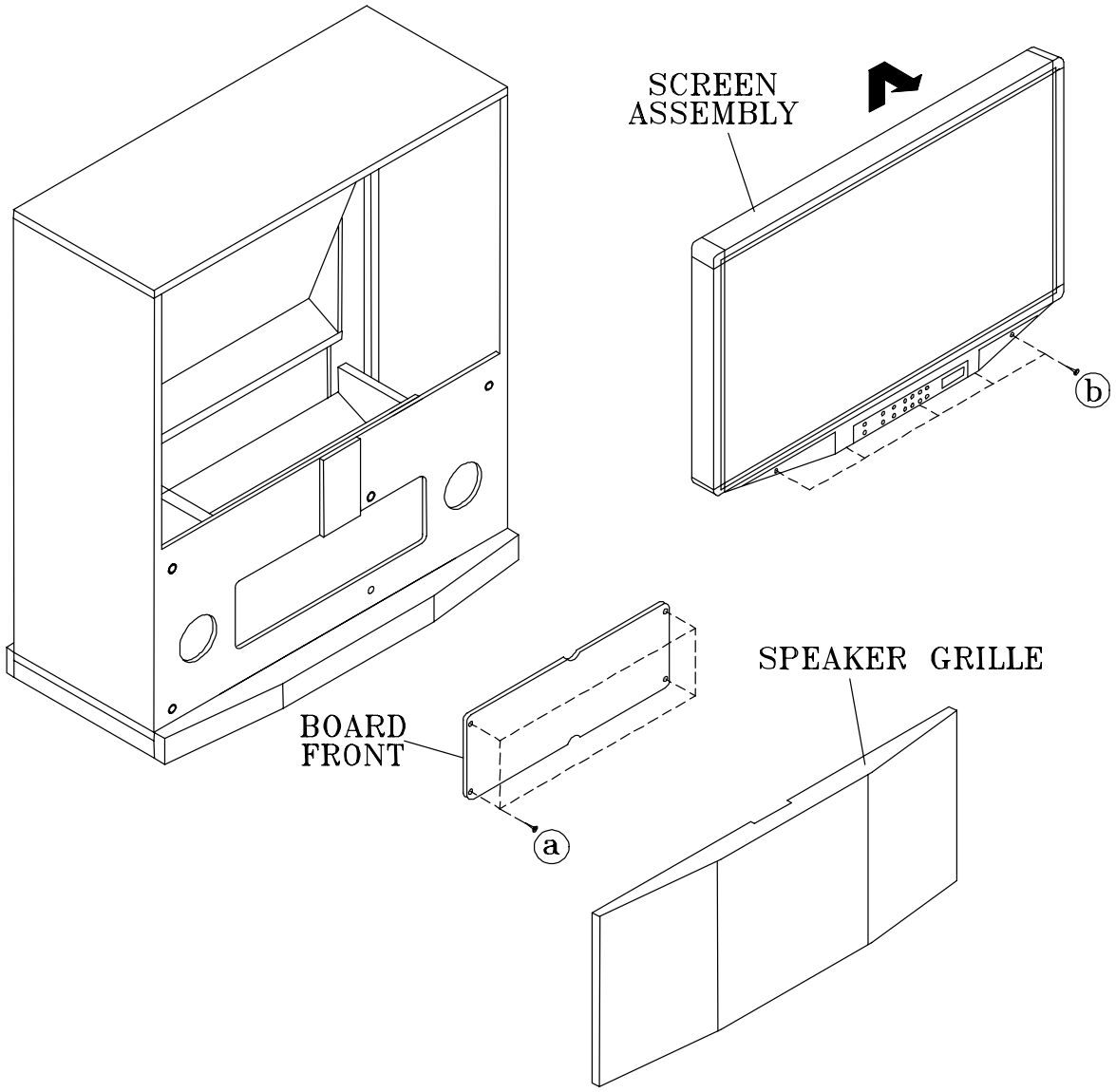

Front Cabinet Disassembly

1. Remove the Speaker Grille by pulling forward.
2. Remove the Board Front by removing 4 screws (a).
3. Remove the 4 screws (b) holding the Screen Assembly.
4. Lift the Screen Assembly up and away from the cabinet.

CABINET DISASSEMBLY (FRONT VIEW)

WS-65611

***Refer to the Parts List for Part Numbers**

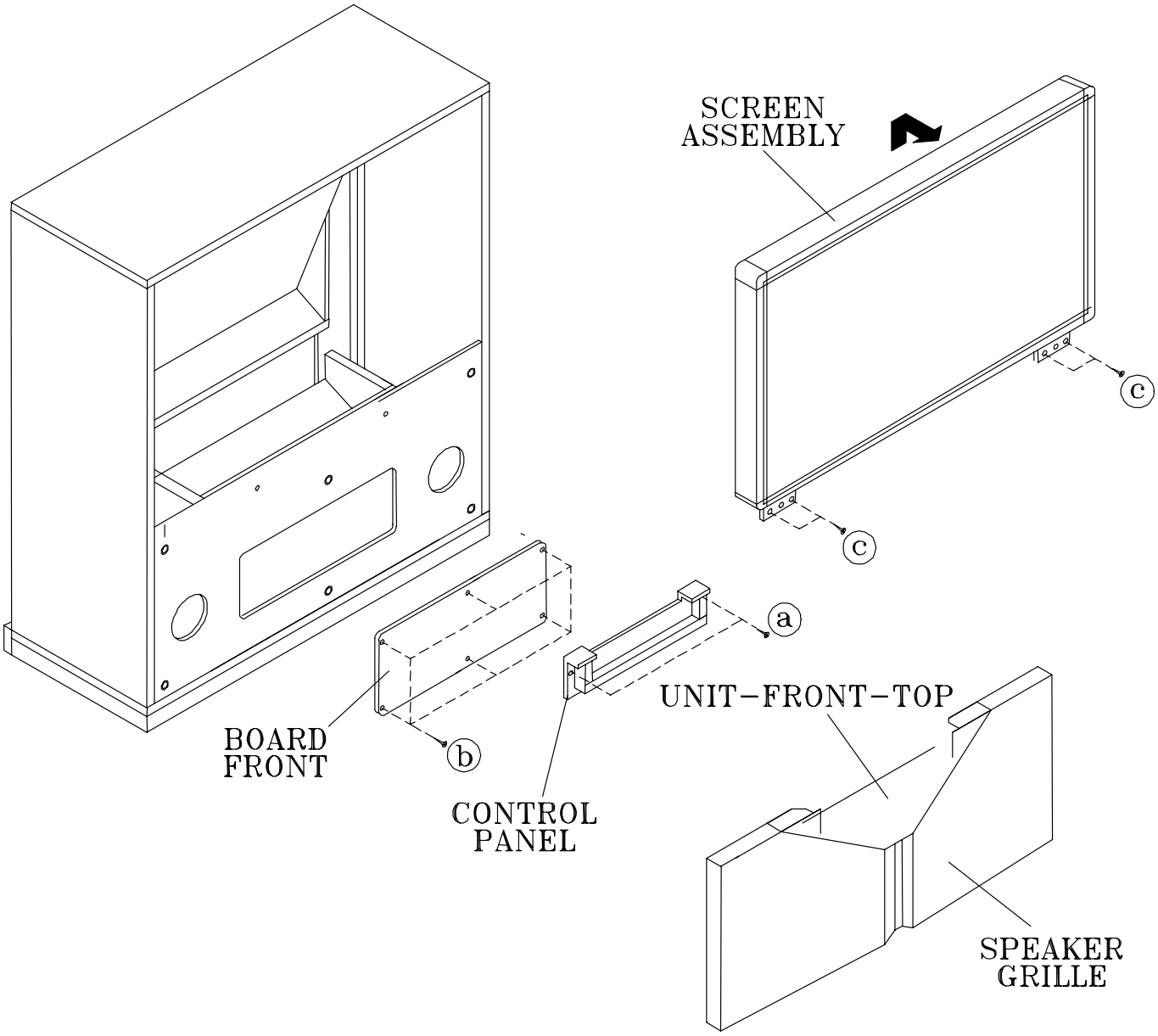

Front Cabinet Disassembly

1. Remove the Speaker Grille by pulling forward.
2. Remove the Board Front by removing screws (b)
3. Remove the Control Panel by removing two screws (a).
4. Remove the four screws (c) holding the Screen Assembly.
5. Lift the Screen Assembly up and away from the cabinet.

CABINET DISASSEMBLY (FRONT VIEW)

WS-55711 / WS-65711 / WS-73711

***Refer to the Parts List for Part Numbers**

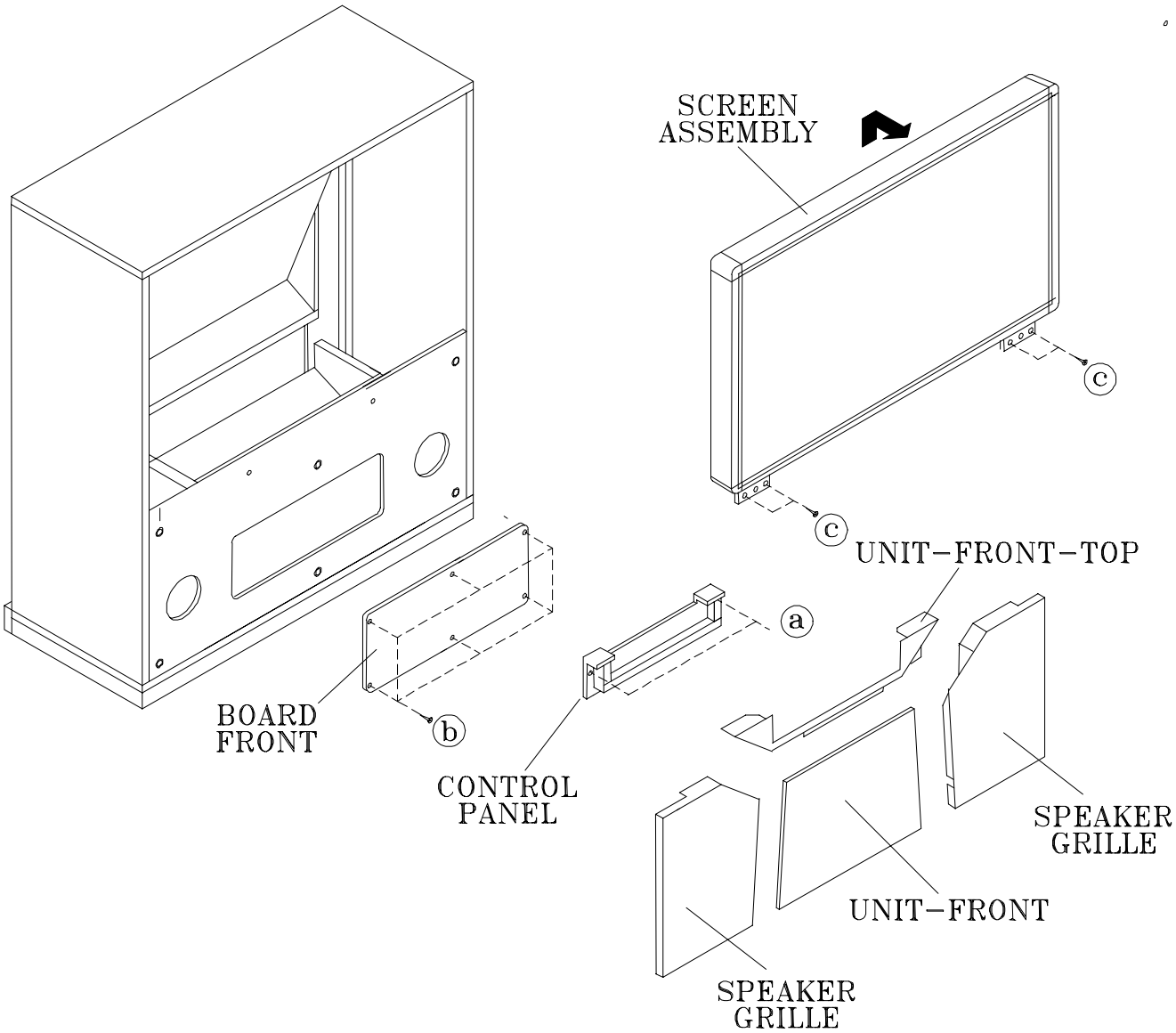

Front Cabinet Disassembly

1. Remove the Speaker Grilles and Unit Front by pulling forward.
2. Remove 2 screws (a) to remove the Control Panel.
3. Remove the Board Front by removing 4 screws (b).
4. Remove the 4 screws (c) holding the Screen Assembly.
5. Lift the Screen Assembly up and away from the cabinet.

CABINET DISASSEMBLY (REAR VIEW)

WS-B55 / WS-55511 / WS-65511 / WS-65611/ WS-55711 / WS-65711 / WS-73711

***Refer to the Parts List for Part Numbers**

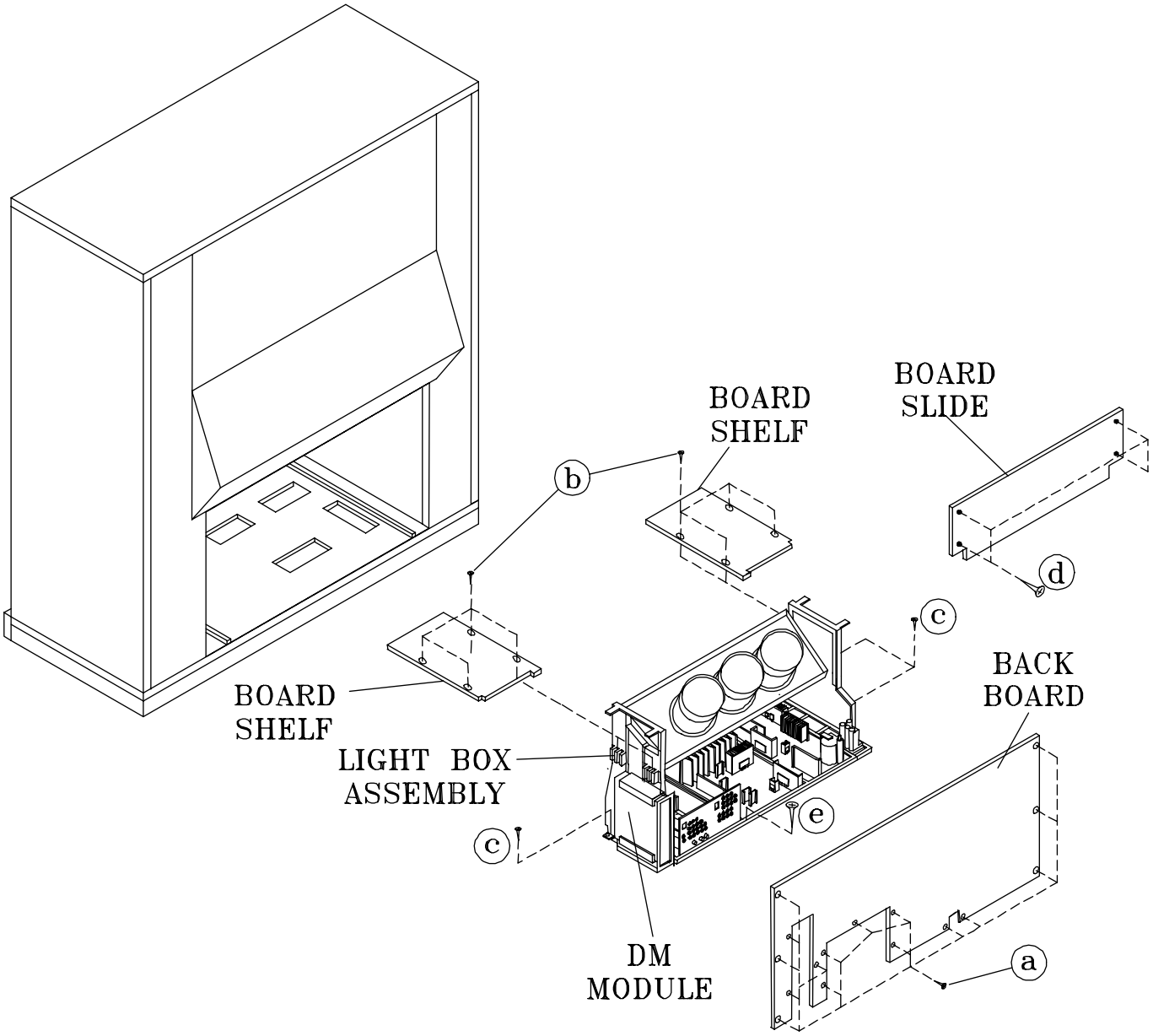

Rear Cabinet Disassembly

1. Remove screws (a) holding the Back Board.
2. Remove 4 screws (a) holding the Board Slide
3. Remove the 4 screws (b) holding each Board Shelf.
4. Remove screw (e) and 3 screws (c) securing the Light Box Assembly.
5. Be certain that all cables and connectors between the Light Box Assembly and external items are disconnected (e.g. speaker plugs, etc.).
6. Slide the Light Box out the rear of the Cabinet.

CABINET DISASSEMBLY (FRONT VIEW)

WS-65712

***Refer to the Parts List for Part Numbers**

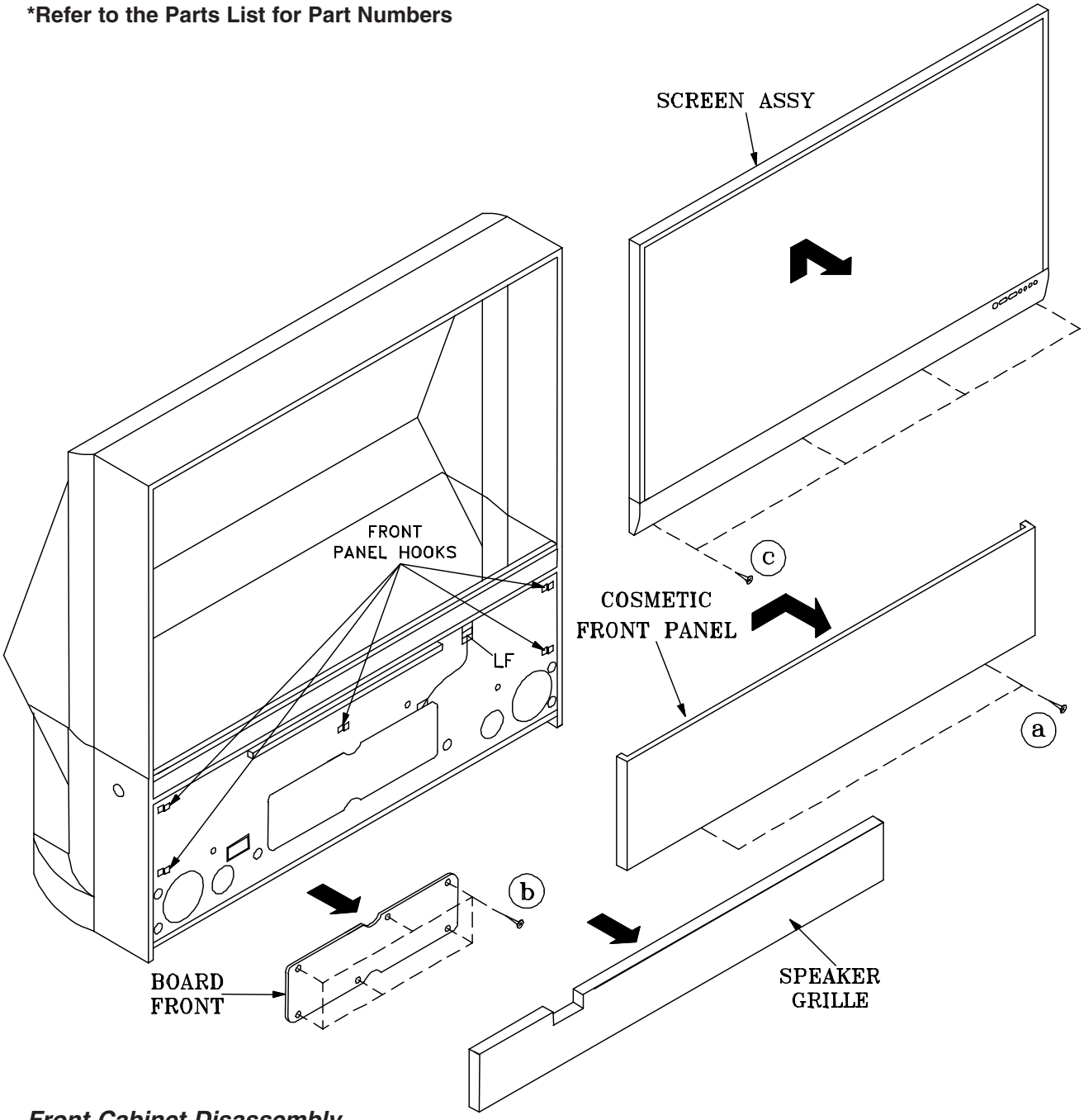

Front Cabinet Disassembly

1. Remove the Speaker Grille by pulling forward.
2. Remove 2 screws (a) securing the Front Panel.
3. Slide the Front Panel 1/2 inch to the right, then pull away from the TV.
4. Remove 6 screws (b) to remove the Board Front.
5. Unplug the LF connector.
6. Remove the 4 screws (c) securing the Screen Assembly.
7. Lift the Screen Assembly up and away from the cabinet.

CABINET DISASSEMBLY (REAR VIEW)

WS-65712

***Refer to the Parts List for Part Numbers**

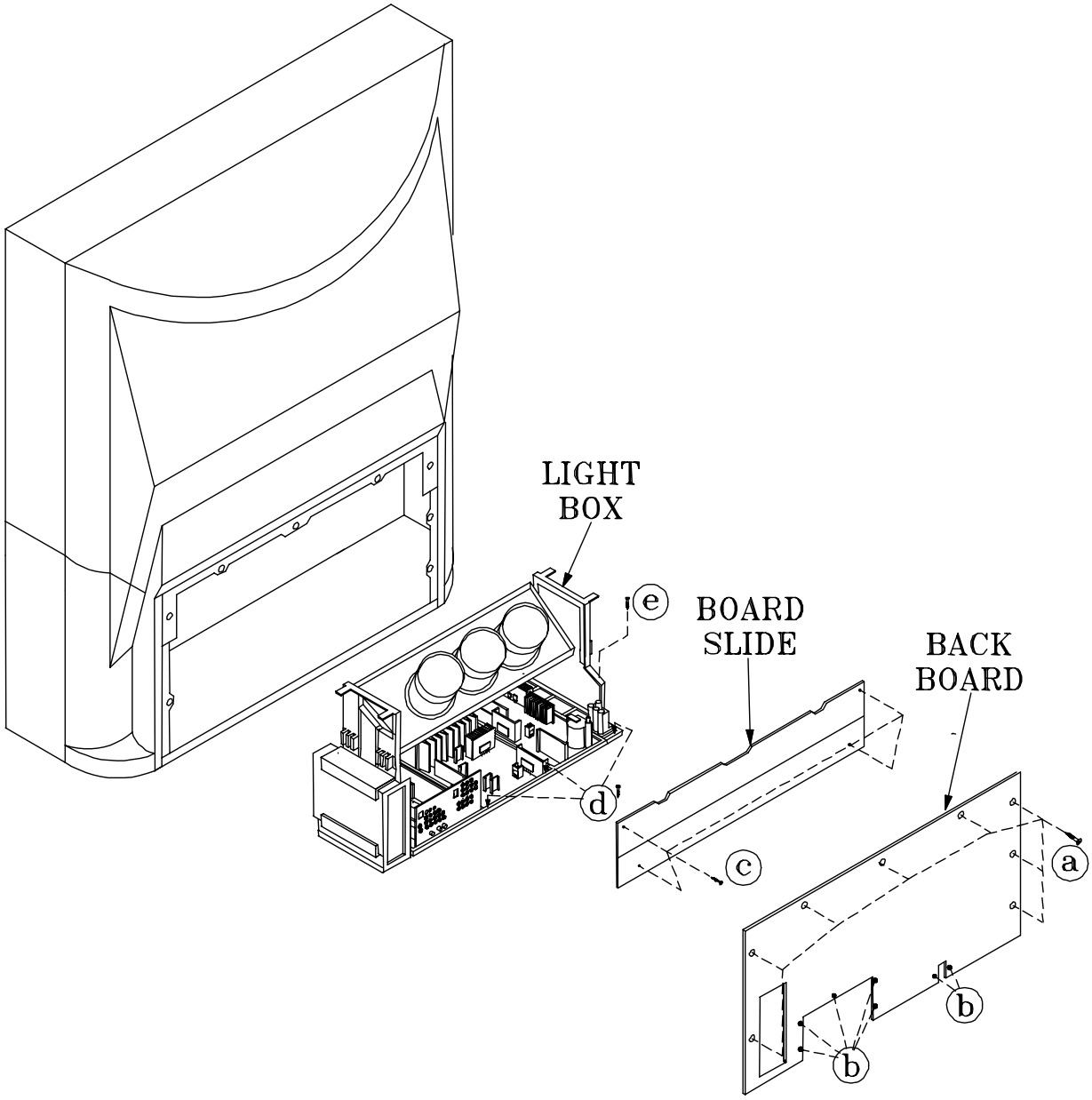

Rear Cabinet Disassembly

1. Remove screws (a) and (b) holding the Back Board.
2. Remove the 4 screws (c) holding each Board Slike.
3. Remove the 3 screws (c) and screw (e) securing the Light Box Assembly.
4. Disconnect cabling to the front panel (Control Panel, Speakers, Inputs, etc.)
4. Slide the Light Box out the rear of the Cabinet.

SERVICING THE LENTICULAR SCREEN AND FRESNEL LENS

CAUTION: **Wear gloves** when handling the Lenticular Screen and Fresnel Lens. This prevents cuts and finger prints. **Do not place Fresnel Lens in the sun**. This may cause fire and heat related injuries.

WS-48511

Lenticular Screen and Fresnel Lens Removal

1. Remove the screen assembly shown in the Cabinet Disassembly procedure.
2. Remove the Top, Bottom and Side Screen Holders.
3. Carefully lift the Lenticular Screen and Fresnel Lens combination from the Screen Frame assembly.

Note: When separating the Lenticular Screen from the Fresnel Lens, use caution while prying the Screen and Lens apart. Use a slot type screw drive, and remove the pressure sensitive double sided tape.

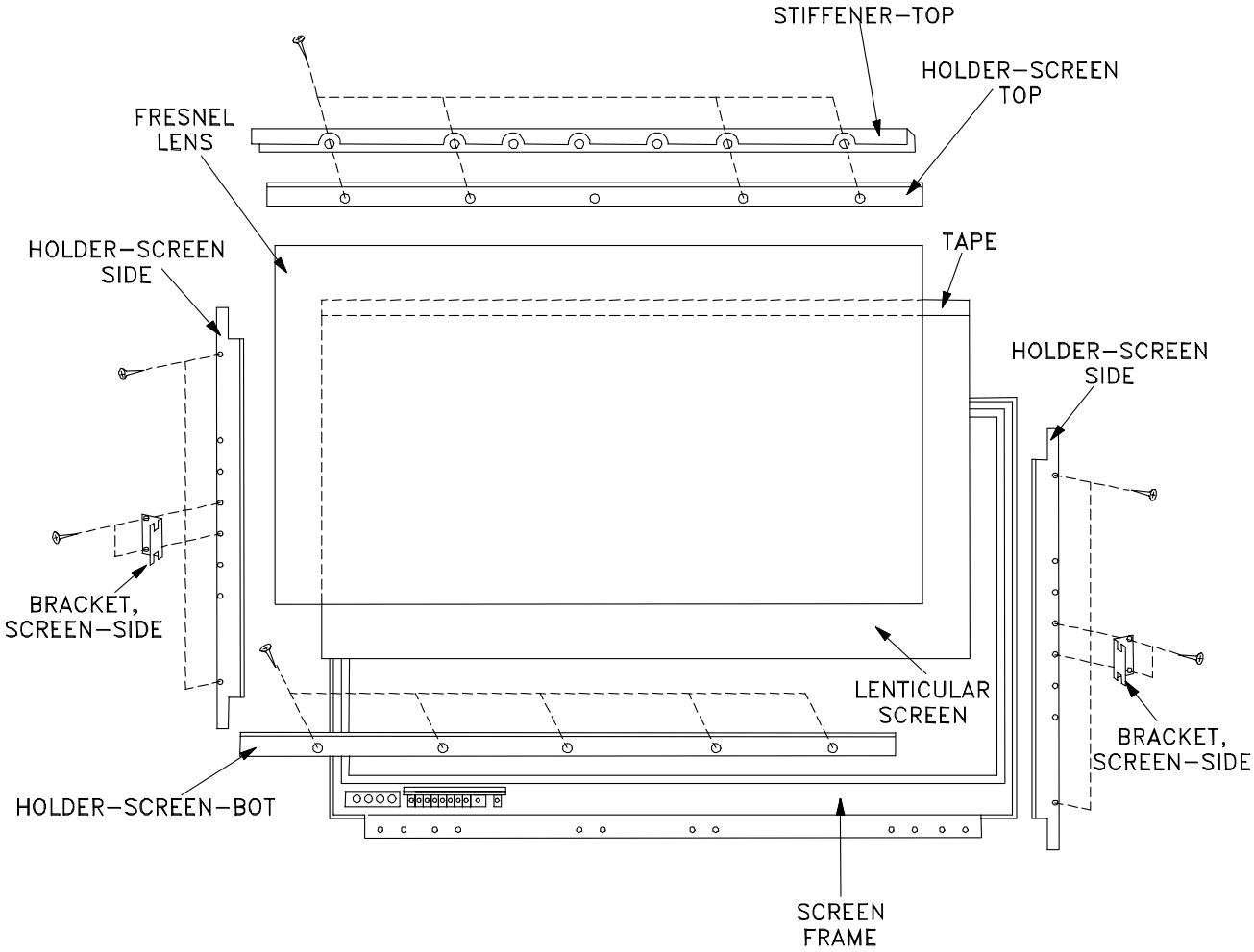

SERVICING THE LENTICULAR SCREEN AND FRESNEL LENS

CAUTION: **Wear gloves** when handling the Lenticular Screen and Fresnel Lens. This prevents cuts and finger prints. **Do not place Fresnel Lens in the sun**. This may cause fire and heat related injuries.

WS-B55 / WS-55511 / WS-65511
Lenticular Screen and Fresnel Lens Removal

1. Remove the screen assembly shown in the Cabinet Disassembly procedure.
2. Remove the screws (a) securing the Screen Holder.
3. Slide the Lenticular Screen and Fresnel Lens from the Screen Frame.

Note: When separating the Lenticular Screen from the Fresnel Lens, use caution while prying the Screen and Lens apart. Use a slot type screw drive, and remove the pressure sensitive double sided tape.

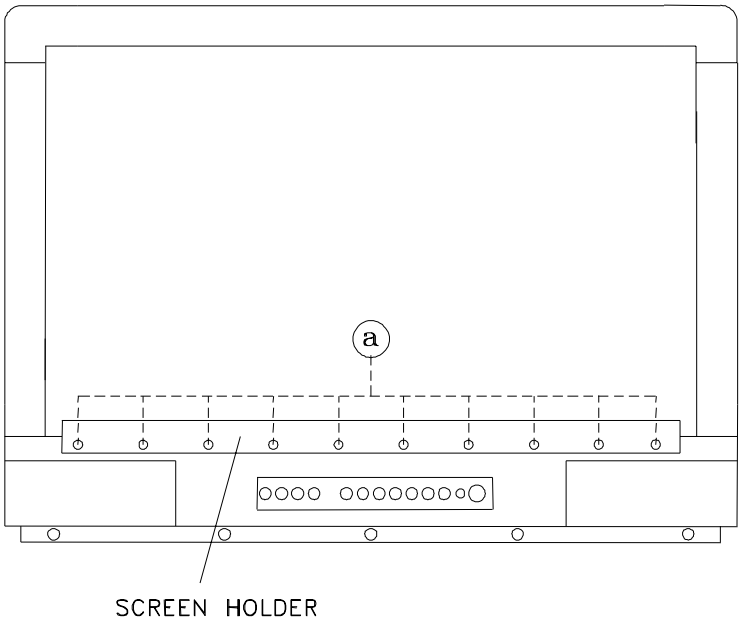

SERVICING THE LENTICULAR SCREEN AND FRESNEL LENS

CAUTION: **Wear gloves** when handling the Lenticular Screen and Fresnel Lens. This prevents cuts and finger prints. **Do not place Fresnel Lens in the sun**. This may cause fire and heat related injuries.

WS-55711 / WS-65611 / WS-65711 / WS-65712 / WS-73711 Lenticular Screen and Fresnel Lens Removal

1. Remove the screen assembly shown in the Cabinet Disassembly procedure.
2. Remove the Screen Frame top section by removing 4 screws (a).
3. Carefully grasp the Lenticular Screen and Fresnel Lens combination and pull upward and out of the Screen Frame Assembly.

Note: When separating the Lenticular Screen from the Fresnel Lens, use caution while prying the Screen and Lens apart. Use a slot type screw drive, and remove the pressure sensitive double sided tape.

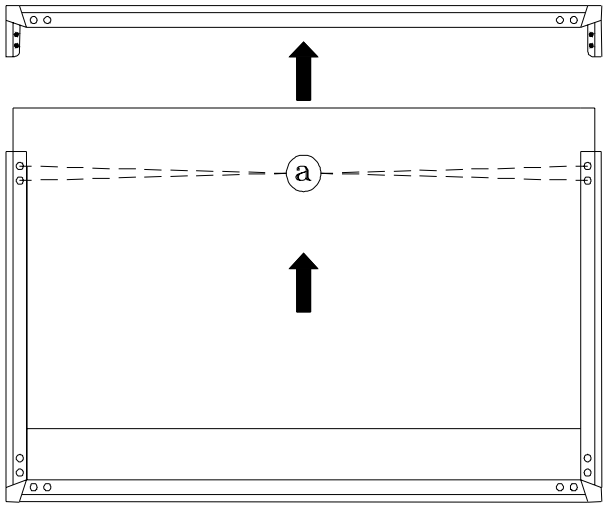

WS-55711
WS-65611
WS-65711
WS-73711

Rear View

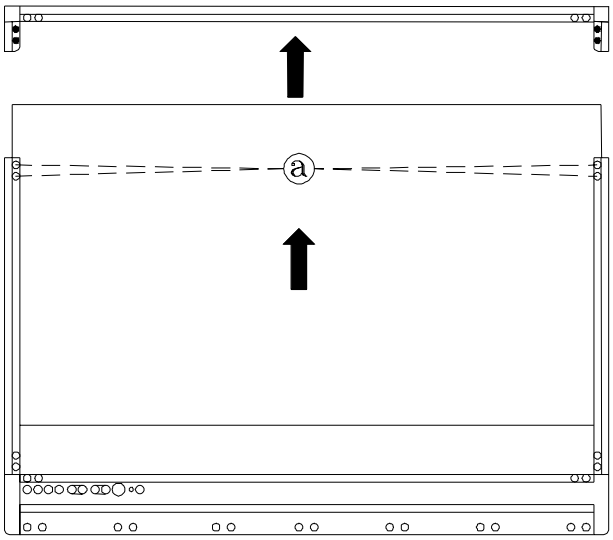

WS-65712

Rear View

SERVICING THE LENTICULAR SCREEN AND FRESNEL LENS

2. Lenticular Screen and Fresnel Lens Installation.

Note: Store the Lenticular Screen and Fresnel Lens in a cool dry place. High humidity may deform the Lenticular Screen and Fresnel Lens.

1. Apply double coated tape (Part # LENS-TAPE) along the top front edge of the Fresnel Lens as shown below. Refer to the Table below for proper tape length.
2. Place the Fresnel Lens on top of the Lenticular Screen and apply pressure at the top edge to bond them together as shown below.

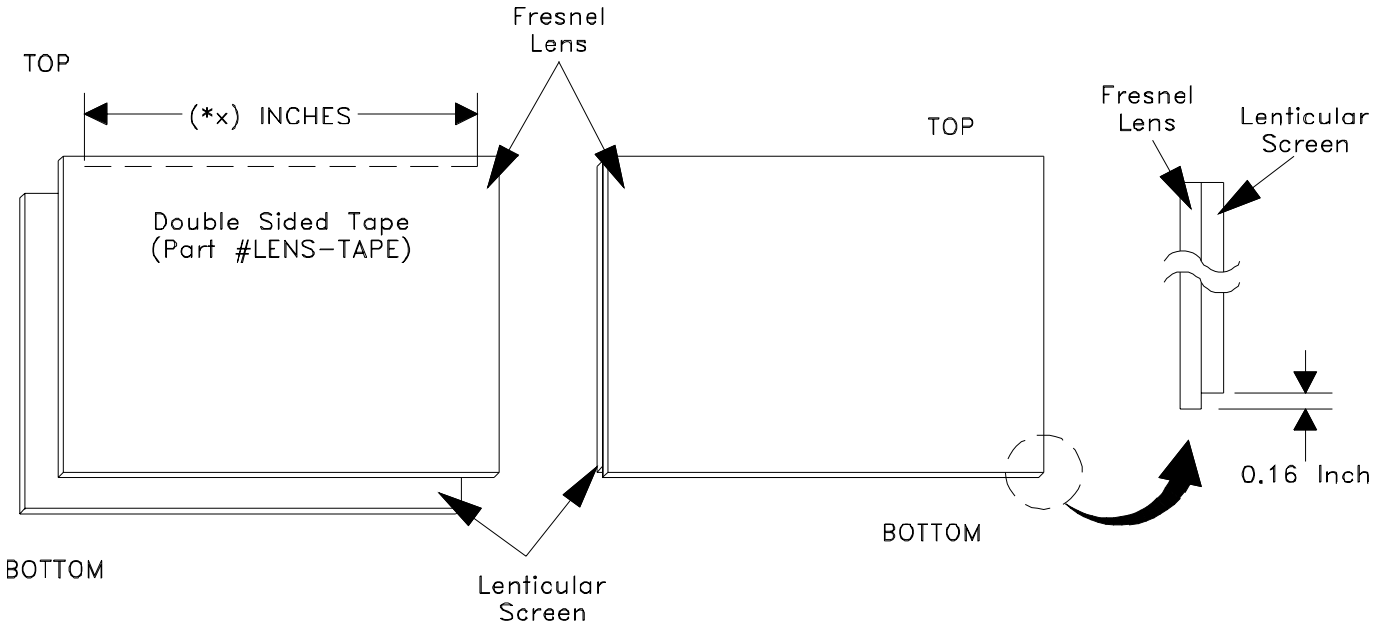

Model	Screen Size	Tape Length
WS-48511	48"	41.76"
WS-B55	55"	47.8"
WS-55511	55"	56.5"
WS-55711	55"	56.5"
WS-65511	65"	56.5"
WS-65611	65"	56.5"
WS-65711	65"	56.5"
WS-65712	65"	56.5"
WS-73711	73"	63.51"

SERVICING THE DIAMONDSHIELD™

1. DiamondShield™ Removal Procedure

The location of the DiamondShield™ molding clips varies between models, top and bottom, or sides. Use the appropriate disassembly procedure given below.

Note: ***Wear gloves when handling the DiamondShield™ to prevent finger prints.***

Top & Bottom Molding Clips

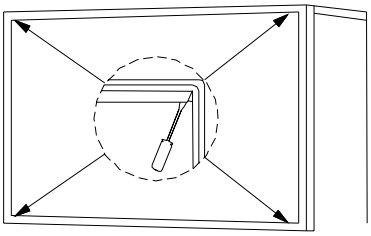

1. Gently insert a small screwdriver between the DiamondShield™ and one end of the clip to pry the clip loose.

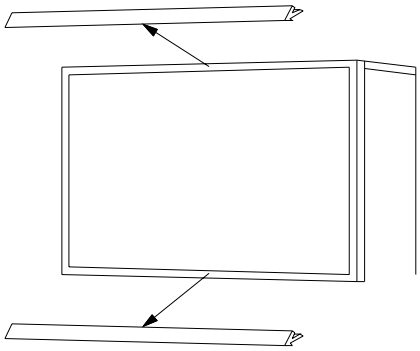

2. Remove both clips by pulling them toward you.

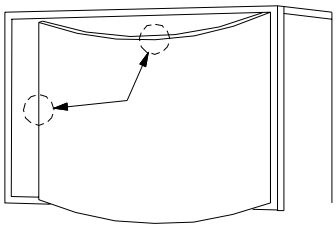

3. Carefully insert a small screwdriver into the gap at the top/center point of the Shield and pull the Shield slightly away from the unit. Place your hands at the points shown and gently bow the Shield toward you and remove from the unit. Then re-install the two clips.

Side Molding Clips

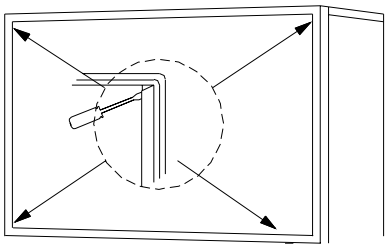

1. Gently insert a small screwdriver between the DiamondShield™ and one end of the clip to pry the clip loose.

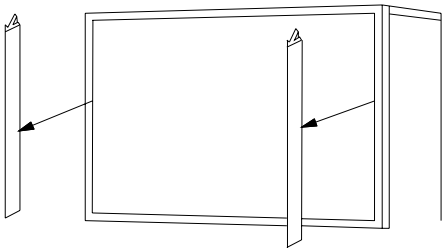

2. Remove both clips by pulling them toward you.

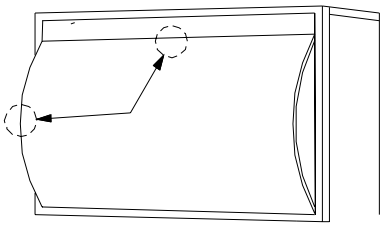

3. Carefully insert a small screwdriver into the gap at the side/center point of the Shield and pull the Shield slightly away from the unit. Place your hands at the points shown and gently bow the Shield toward you and remove from the unit. Then re-install the two clips.

2. DiamondShield™ Installation Procedure

*(See the Parts List for DiamondShield™ part numbers)

To install the DiamondShieldTM, reverse the above Removal Procedure.

CABINET SEPARATION

Mitsubishi 65 and 73 inch Projection TVs have been assembled in two pieces. These pieces may be separated for easier delivery and setup. The cabinet separation procedure requires two persons and varies between models.

WS-65712 Cabinet Separation Procedure

Figure 1

1. Remove the Speaker Grille by pulling forward.
2. Remove the two Front Cover screws (a).
3. To remove the Front Cover, slide to the right approximately 1/2", then pull away from the TV.

Figure 2

4. Remove Screw (b) from the front board.
5. Disconnect the LF connector.

Figure 3

6. Remove screw (c) on each side of the cabinet.
7. Remove the plastic cover on each side.

Figure 4

8. Slide the top of the cabinet top forward.

Figure 5

9. Carefully lift the cabinet top until the interlock tabs clear the cabinet bottom

Figure 6

10. Carefully place the cabinet top on the floor as shown.

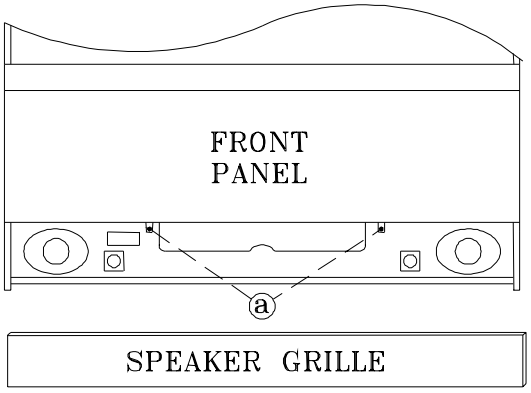

Figure 1

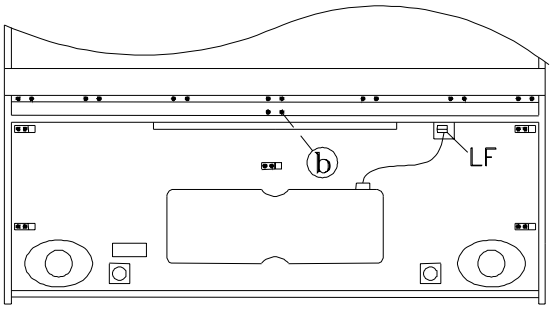

Figure 2

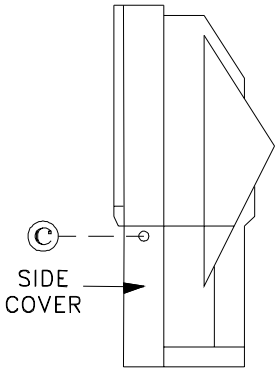

Figure 3

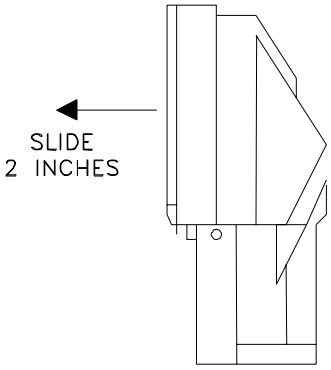

Figure 4

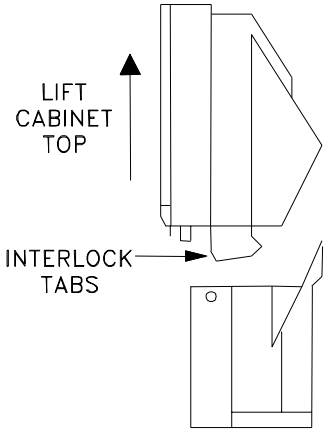

Figure 5

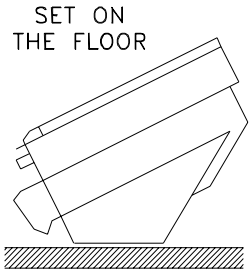

Figure 6

CABINET SEPARATION PROCEDURE
(WS-65511 / WS-65611 / WS-65711 / WS-73711)

WS-65511
Cabinet Separation Precedure

1. Remove the Screen Assembly and disconnect all cable harnesses between the Frame Assembly and the PCB-SIGNAL, refer to Cabinet Front Disassembly.
2. Remove the 4 screw covers (a).
3. Remove 4 screws (b) securing the top and bottom cabinet sections .
4. Carefully lift the cabinet top and place it on the floor.
5. Place the cabinet bottom in the desired location.
6. Reverse the procedure and mount the cabinet top on the cabinet bottom.
7. Reinstall the the Screen Assembly and connect all cable harnesses between the Screen Assembly and the PCB-SIGNAL.

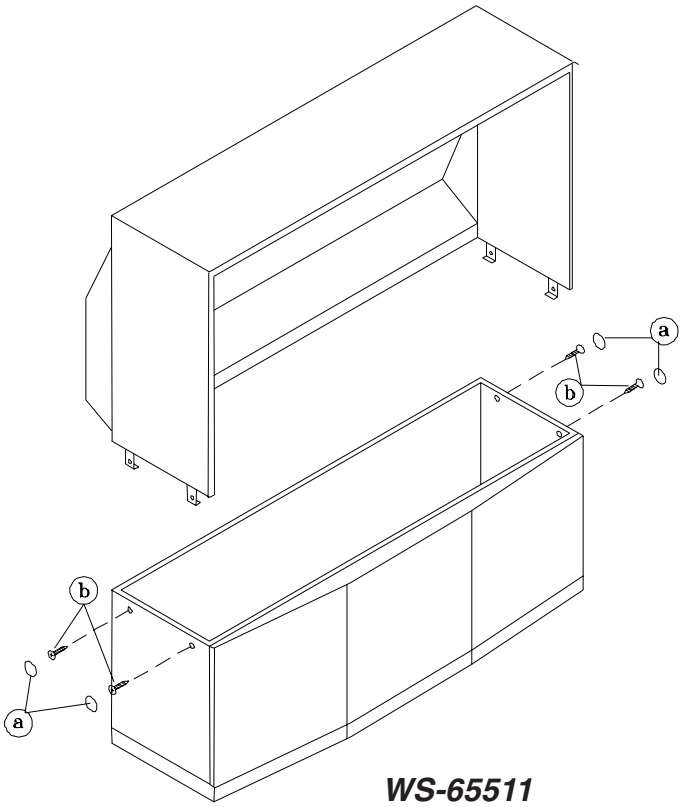

WS-65511

WS-65611 / WS-65711 / WS-73711
Cabinet Separation Precedure

1. Remove the 4 screw covers (a).
2. Remove 4 screws (b) securing the top and bottom cabinet sections .
3. Carefully lift the cabinet top and place it on the floor.
4. Place the cabinet bottom in the desired location.
5. Reverse the procedure and mount the cabinet top on the cabinet bottom.

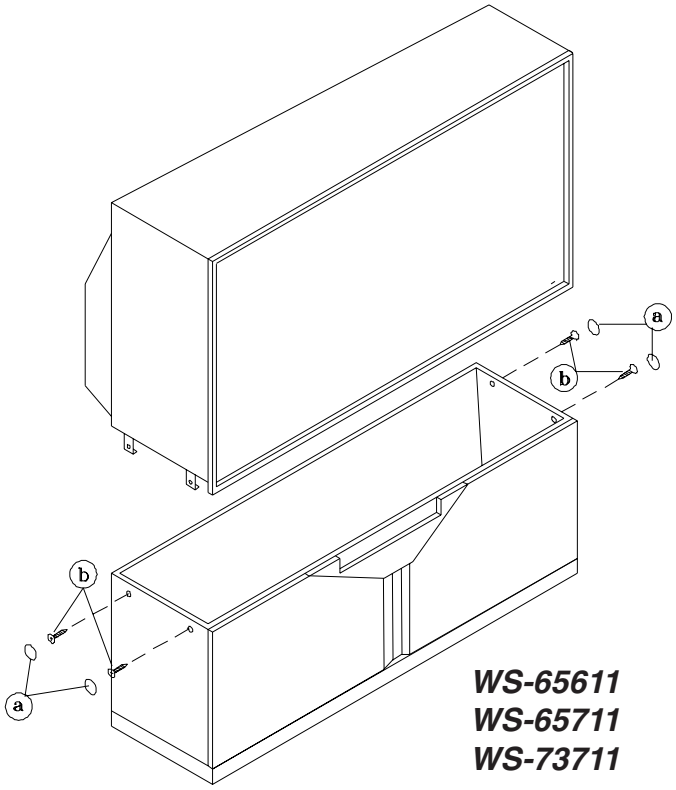

WS-65611
WS-65711
WS-73711

Main Chassis Removal

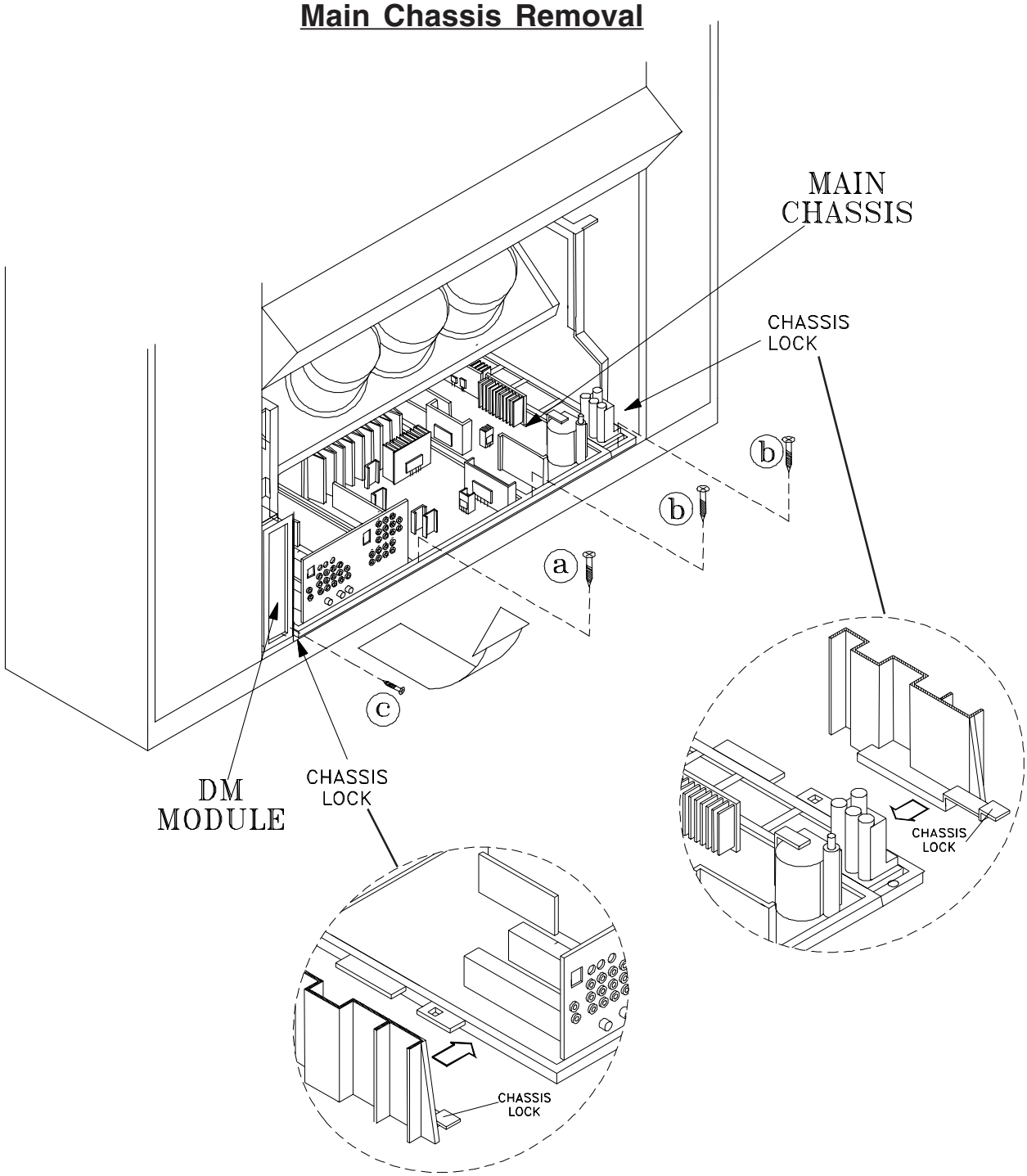

Chassis and DM Module Removal

The chassis and DM Module can be removed as a single unit.

1. Undo the cable wire ties to the Front Panel, Speakers, CRTs, etc.
2. Remove screw (a) securing the Main Chassis [and screws (b) in model WS-65712] .
3. Release the Chassis Locks on each side of the chassis.
3. Slide the Chassis and DM Module out the rear of the unit.
5. Tilt upward to access the bottom of the main chassis.

NOTE: If the chassis cannot be removed with the DM Module, due to insufficient cable length:

1. Perform Step 1 through 3 above.
2. Remove 1 screw (c).
3. Slide the chassis only out the rear of the unit.

PCB Locations

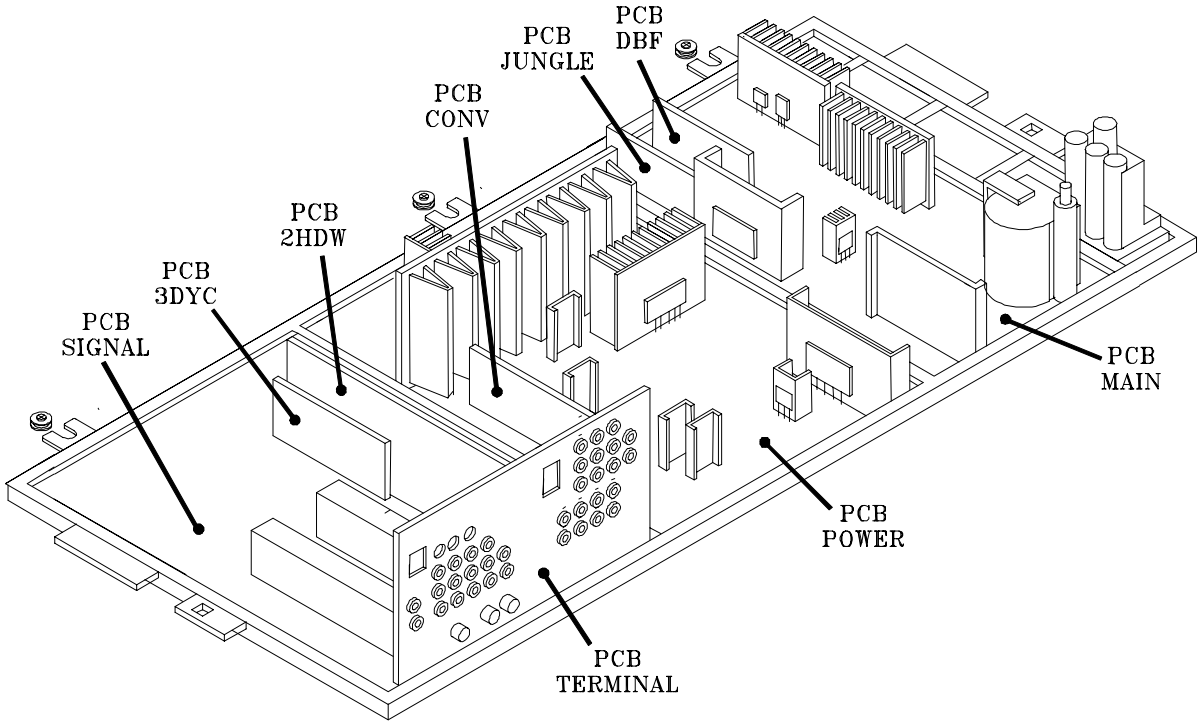

Main Components Location

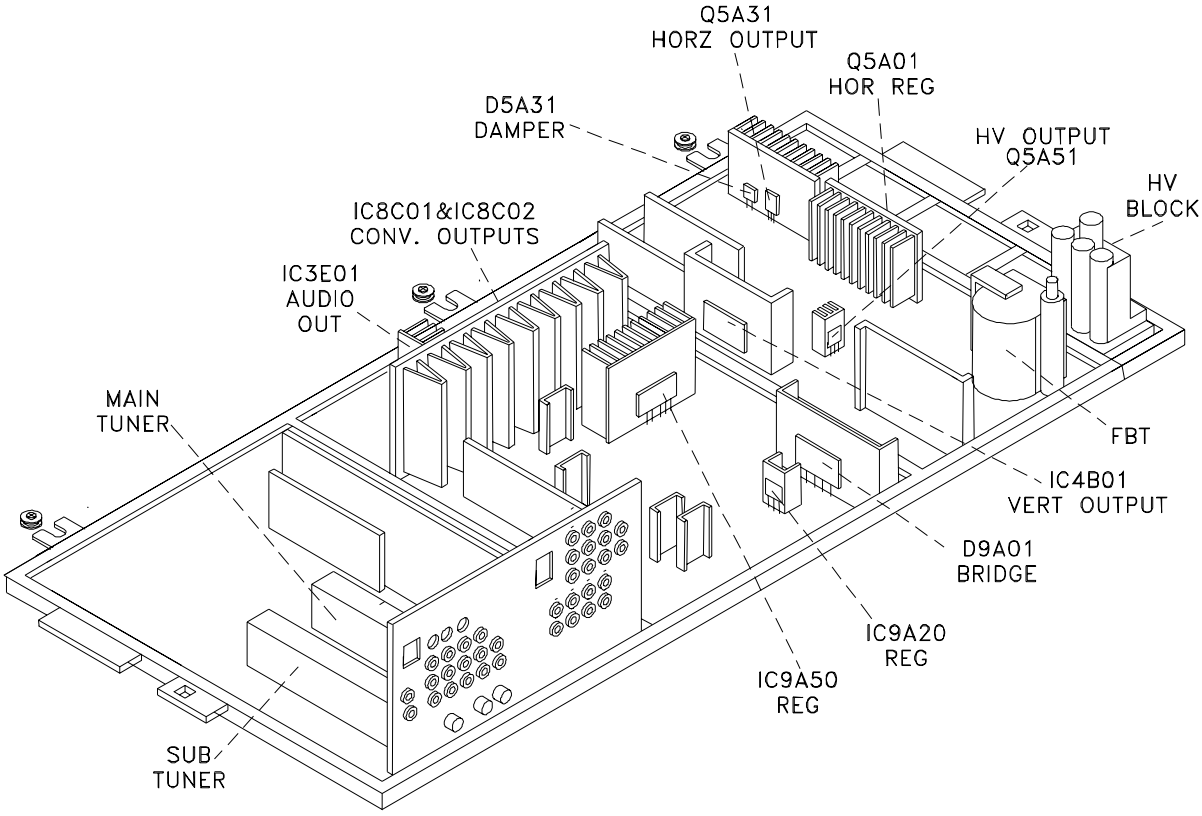

DM Module Main Components Location

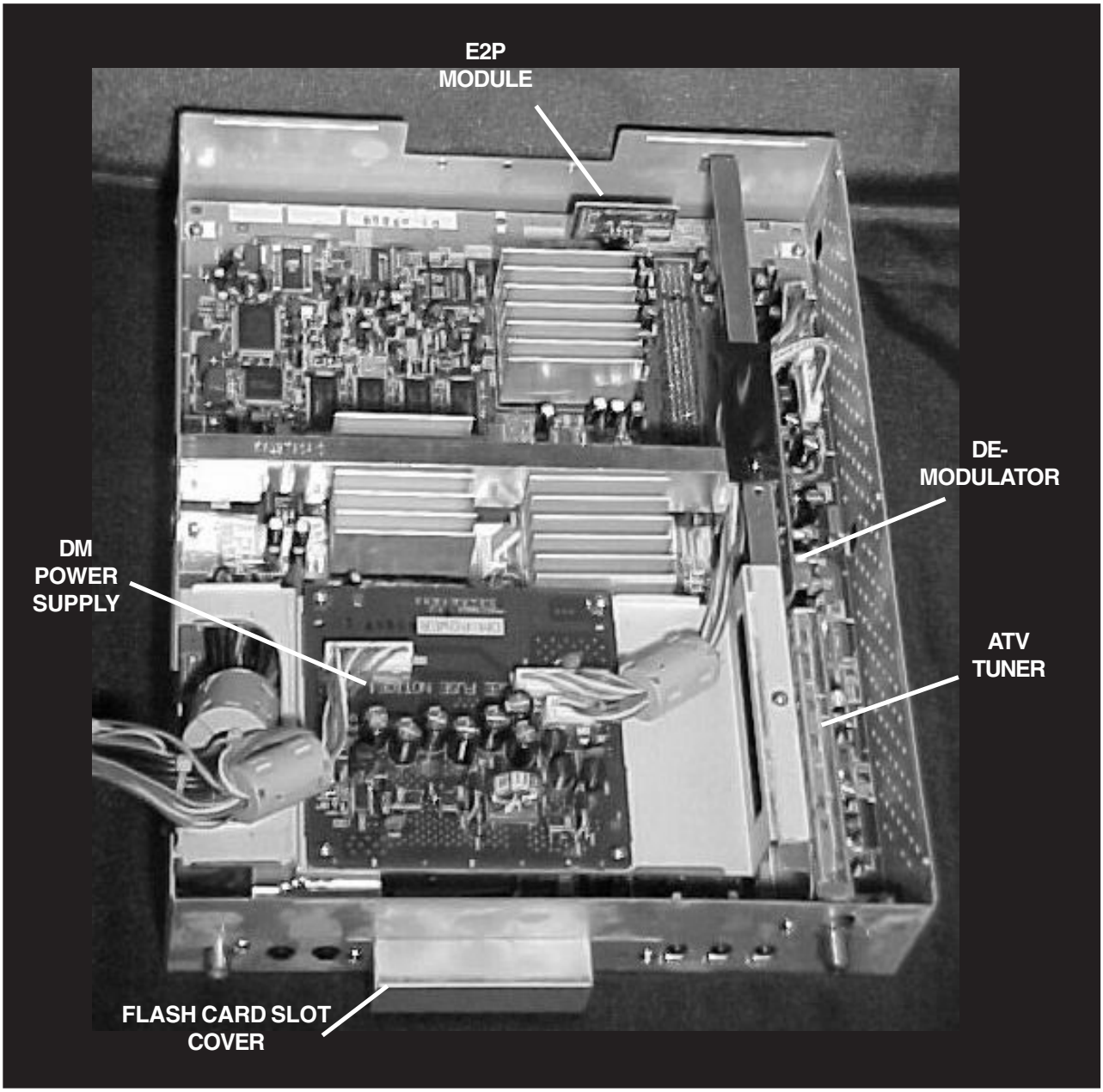

CRT REPLACEMENT

1. Removal of the CRT

Caution! High voltage should be completely discharged prior to CRT removal. Since The CRTs receive high voltage from the HV Block, discharge by shorting the open end of the respective high voltage cable to chassis ground.

Note: Refer to the Cabinet Disassembly Procedures when performing steps 1 through 4.

1. Remove the Speaker Grille, Front Board, and Screen Assy.
2. Remove the Back Board.
3. Remove the Anode Lead Wire from the CR Block.
4. Remove the PCB-CRT.
5. Remove 4 hex-screws "a" retaining the Optical Unit. [Figure 5-1]
6. Remove 4 screws "b" retaining the Lens.

Note: DO NOT loosen the RED screws. Doing so will break the seal between the C-Element and the # 6 Lens, causing leakage of the CRT Coolant.

7. Remove 4 screws "c" retaining the CRT. [Figure 5-2]
8. Remove the Deflection Yoke from the neck of the CRT. [Figure 5-7]

Figure 5-1

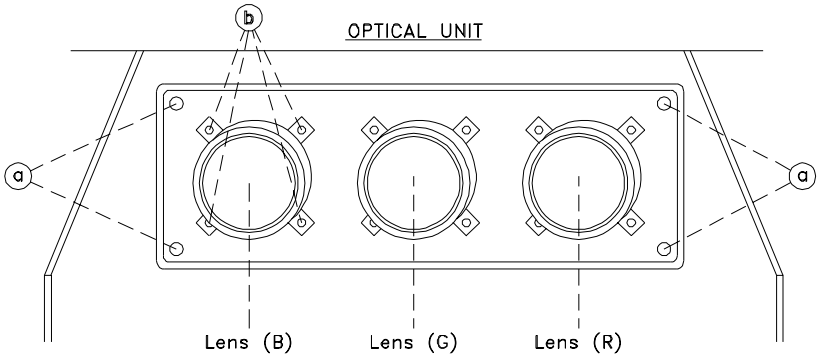

Figure 5-2

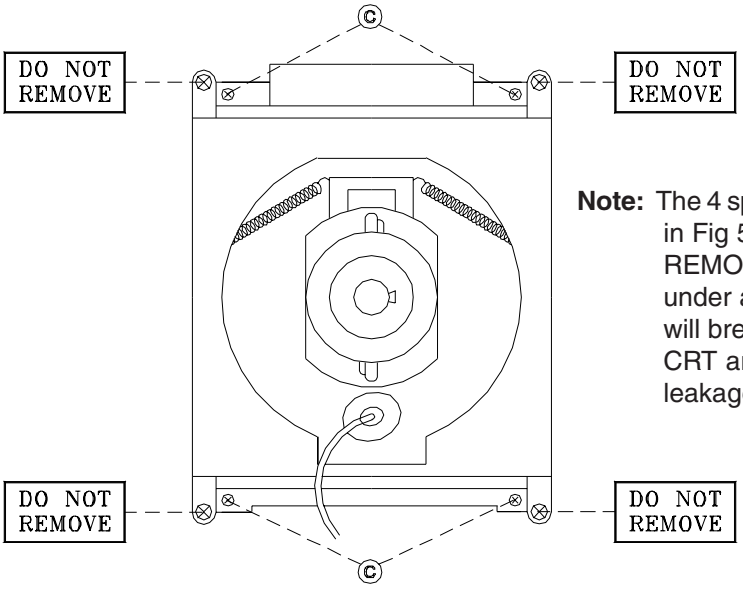

Note: The 4 spring-loaded screws shown in Fig 5-2 and labeled as "DO NOT REMOVE", should not be loosened under any circumstance. Doing so will break the seal between the CRT and the CRT-Spacer, causing leakage of the CRT Coolant.

2. Installation of the CRT

Note: The replacement CRT is supplied as an assembly comprised of the CRT and the Inner Lens with the space between them filled with ethylene glycol. Care should be taken during handling and installation to prevent shock from disrupting the seal or alignment between the CRT and Inner Lens. [Figure 5-3]

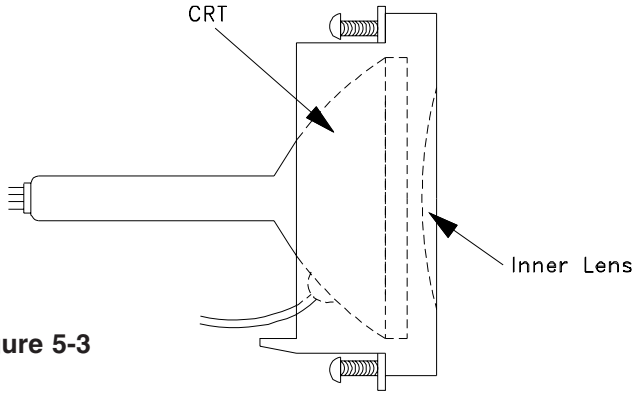

Figure 5-3

Note: The CRT fixing screws should not be loosened nor should they be removed. [Figure 5-4]

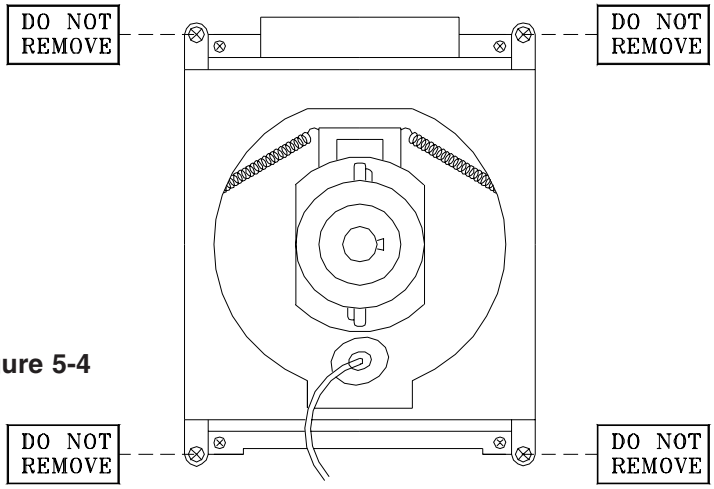

Figure 5-4

1. Carefully position the replacement CRT and fasten in place using 4 screws "d". [Figure 5-6]

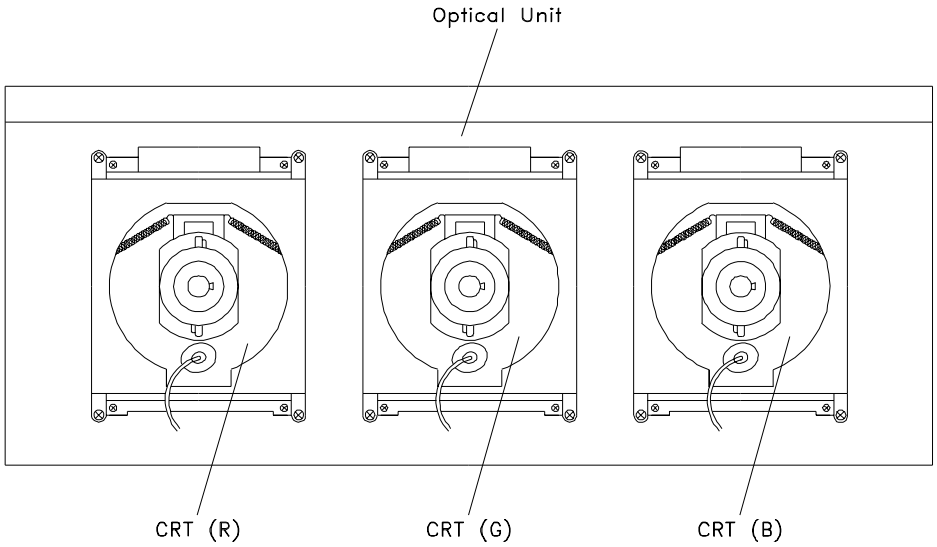

Figure 5-5

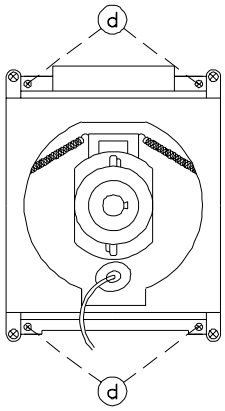

Figure 5-6

2. Install the Deflection Yoke on the CRT neck. [Figure 5-7]
3. Install the Lens that was removed in steps 8 and 9 of Removal Of The CRT. [Figures 5-1 and 5-2]
   a) Position the Lens so that the Label faces the direction shown in Figure 5-8.
   b) Install the mounting screws. [Figure 5-1]
4. Connect the PCB-CRT.
5. Insert the Optical Unit into the Light Box Assembly.
6. Insert the Anode Lead Wire into the Flyback Transformer.
7. Re-clamp the Lead Wire in its original position.

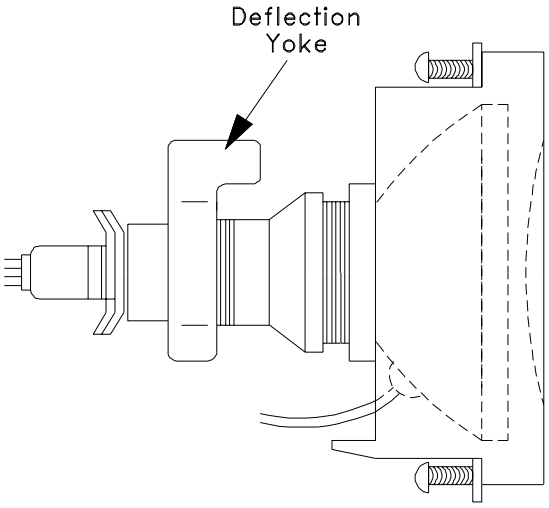

Figure 5-7

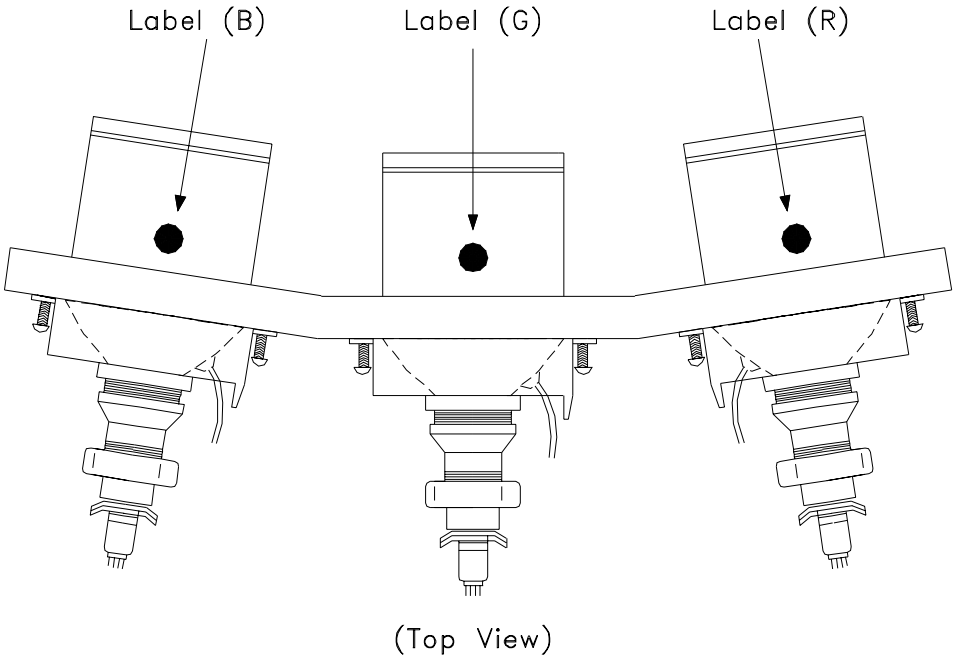

Figure 5-8

Adjustment procedures after replacing the CRT(s)

- CRT Cut Off / White Balance Adjustment
- Static Convergence Adjustment
- Dynamic Convergence Adjustment

ELECTRICAL ADJUSTMENTS

Note: Perform only the adjustments required.
Do not attempt an alignment if proper equipment is not available.

Test Equipment

- Oscilloscope (Unless otherwise specified, use 10:1 probes)
- Signal Generator (both SD and HD capable)
- Frequency Counter
- Direct Current Voltmeter
- Direct Current Power Supply
- Multiplex Audio Signal Generator
- Direct Current Ampere Meter

Test Signal

A. Monoscope Signal

Note: If you do not have a monoscope signal source, connect the unit to a VCR and play a Monoscope *alignment tape.
(* Part Number: 859C568060)

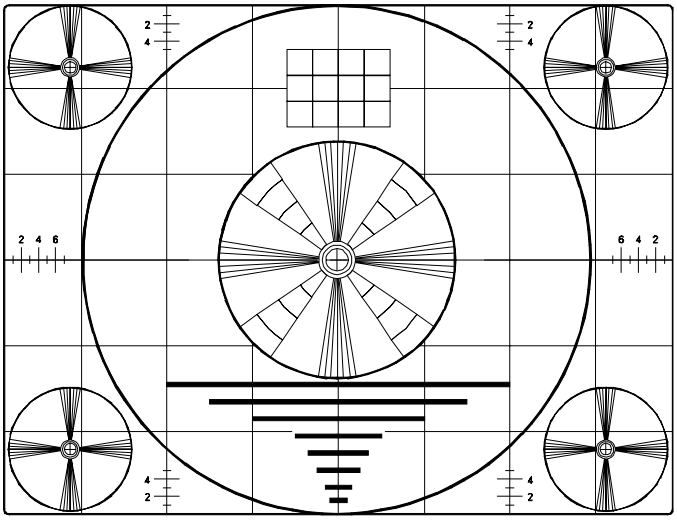

Monoscope Signal

B. Color Bar Signal

Use the color bar signal shown below, unless otherwise specified in this manual.

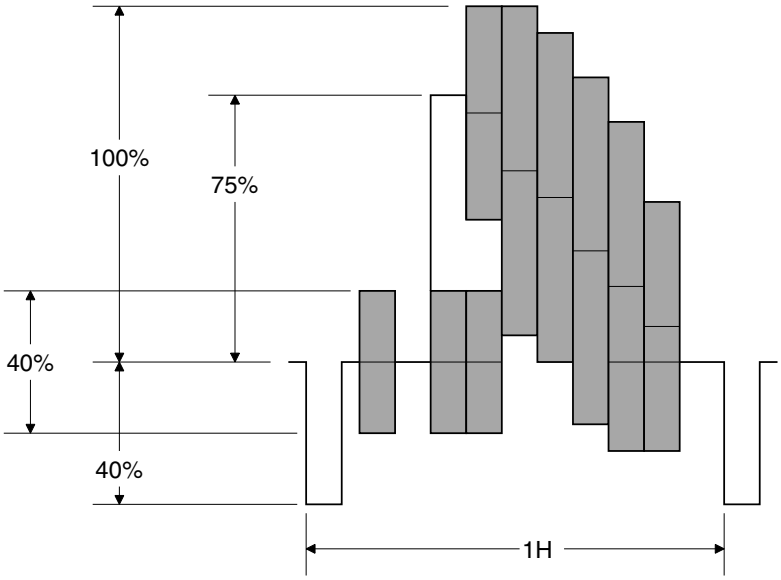

Split-Field Color Bars (100% window)

Initial Setup

A. Option Menu Setup

Follow the steps below for the initial set-up:

1. Select the "MENU" display by pressing the "MENU" button once.
2. Press the number buttons "2", "1", "7", "0" in sequence to select the "OPTION MENU" display.
3. Press the "ADJUST" button to select "INITIAL."
4. Press "ENTER."

   NOTE: At this time channel 3 is automatically selected.

(MENU-2-1-7-0)	
OPTION MENU	
Initial	
Power restore	:OFF
DTV Port	:Auto

B. Default Settings

MAIN MENU DEFAULT SETTINGS

SETUP	
Edit Setup	
Review	
Antenna A	(✓) Enabled
Antenna B	(✓) Enabled
Antenna DTV	(✓) Enabled
Input DTV	(✓) Enabled
Input 1	(✓) Enabled
Input 2	(✓) Enabled
Input 3	(✓) Enabled
Input 4	(✓) Enabled
Input 5	(✓) Enabled
Component 1	(✓) Enabled
Component 2	(✓) Enabled
VGA	(✓) Enabled
Icon Position	As above
Transport Menu	On
Language	English
ANTENNA	
Antenna	ANT A
Memorize Channels	Air
Channel	Ch-3
Memory	Deleted
CLOCK	
Clock Setting	Manual
Set Time	12:00 AM
Set Day	Monday

CAPTIONS	
Closed Captions	With Mute
CC Background	Gray
Digital Channel Guide	On
V-CHIP PARENT LOCK	
V-CHIP	Off
TV Rating	TV-PG
FV-Fantasy Violence	(✓) Enabled
D-Sexual Dialog	(✓) Enabled
L-Adult Language	(✓) Enabled
S-Sexual Situation	(✓) Enabled
V-Violence	(✓) Enabled
Program not Rated	(✓) Enabled
Movie Rating	PG
V-CHIP LOCK BY TIME	
V-Chip Start Time	12:00 PM
V-Chip Stop Time	12:00 PM
Lock By Time	
Lock by Time	Off
Unlock Time	N/A
Front Button Lock	Off
TIMER	
Timer	Off
Set Day	Everyday
Set Time	12:00PM
Device	Ant-A
Channel	Ch-3

AUDIO SETTINGS	
Volume	30%
Bass	50%
Treble	50%
Balance	50%
Surround	Off
Listen to	Stereo
Level Sound	Off
TV Speakers	On
VIDEO SETTINGS	
Contrast	100%
Brightness	50%
Sharpness	50%
Color	50%
Tint	50%
Color Temp.	High
Video Noise	Standard
Image Type	Video
VSM Sharpness	On
Video Mute	On
Black Enhancement	On
PIP/POP	
Source	Ant A Ch 3
PIP Position	Lower Right
POP Position	Right Half
Format	Stretched
PIP/POP Format	Dble. Window

A/V RESET DEFAULT SETTINGS (By Input)

A/V Memory	Ant A/B	Ant DTV	Inp-DTV	INPUTS 1/2/3/4/5	Component 1/2	VGA	1394 1/2/3
Contrast	Max.	Max.	Max.	Max.	Max.	Max.	Max.
Brightness	Center	Center	Center	Center	Center	Center	Center
Sharpness	Center	Center	Center	Center	Center	N/A	Center
Color	Center	Center	Center	Center	Center	Center	Center
Tint	Center	Center	Center	Center	Center	Center	Center
Color Temp.	High	High	High	High	High	High	High
Video Noise	Standard	N/A	Standard	Standard	Standard	N/A	N/A
Image Type	Video	N/A	Video	Video	Video	N/A	N/A
Bass	Center	Center	Center	Center	Center	Center	Center
Treble	Center	Center	Center	Center	Center	Center	Center
Balance	Center	Center	Center	Center	Center	Center	Center
Surround	OFF	OFF	OFF	OFF	OFF	OFF	OFF
Listen To	Stereo	English	N/A	N/A	N/A	N/A	N/A
Level Sound	OFF	OFF	OFF	OFF	OFF	OFF	OFF

C. A/V Memory

Each of the external inputs has its' own Audio/Video Memory. A change in an A/V setting at a specific input is stored in memory for that specific input.

A/V Reset

1. The front panel AV Reset button initializes all A/V Memories.
2. The AV Reset in the user's menu initializes only the selected input's A/V Memory.

LED Indicator Diagnostics

The "Power ON LED" provides an indication of the sets operation, and the possible cause of a malfunction.

1. Initial Control Circuitry Check

Immediately after the TV is connected to an AC power source:

LED Indications	Conditions	Probable Cause
Off	After AC is applied	Standy Power Supply or TV µPC not running
Fast Blink for 70 sec.	After AC is applied	Normal - DM µPC is booting up
Fast Blink (doesn't stop)	After AC is applied	TV µPC is running, but DM failed to boot up
Slow Blink	Set is Off	Normal - Timer is set for Automatic Turn ON

2. Error Code Operational Check

Pressing the front panel "INPUT" and "MENU" buttons at the same time, and holding for 5 seconds, activates the Error Code Mode. The LED flashes denoting a two digit Error Code, or indicating no problem has occured since the last Initalization.

Note: The front panel buttons must used, NOT those on the Remote Control.

- The number of flashes indicates the value of the MSD (tens digit) of the Error Code.
- The flashing then pauses for approximately 1/2 second.
- The LED then flashes indicating the value of the LSD (ones digit) of the Error Code.
- The Error Code is repeated a total of 5 times.

  Example: If the Error Code is "24", the LED will flash two times, pause, and then flash four times.

3. Error Codes

The Error Code designations indicating a malfunction, or no malfunction, are listed below:

Error Code	Probable Cause
12	Normal Operation - No Error Detected
21	X-Ray Protect
22	Short Protect
23	Loss of Horizontal Deflection
24	Loss of Vertical Deflection

Remote Control Operational Modes

There are two Remote Hand Unit Operational Modes, "Standard" and "NetCommand™". The Remote is initially in in the "Standard" mode. The "NetCommand™" mode is used when controlling Home Theater devices using NetCommand™. To change the Remote Operational Mode:

- Set the Remote to the TV Layer
- Point the Remote away from the TV.
- To change to "Netcommand™" ... Hold the "Power" button and press "9-3-5" in sequence.
- To change to "Standard" ... Hold the "Power" button and press "0-0-0" in sequence.

Circuit Adjustment Mode

Most of the adjustments can only be performed using the remote hand unit. Many of the adjustments must be performed in both the 480i and 1080i modes. Video/Color adjustments must be performed in the 480i and 1080i modes, and data must be preset in the 480P (DVD) and VGA modes.

Note: Set the Remote Operational Mode to “NetCommandTM”. (Hold the “Power” button and press “9-3-5” in sequence.) This slows the remote’s response and makes adjustments easier. When adjustments are complete, **set the Remote to its’ original Operational Mode.**

A. Activating the Circuit Adjustment Mode

The current signal source determines if the activated Adjustment Mode is 480i or 1080i.

1. Select the signal source (480i or 1080i).
2. Press the "MENU" button on a remote hand unit.
3. Press the number buttons "2", "1", "5", "7" in sequence. The screen will change to the Adjustment Mode.

Note: Repeat steps 1 and 2 if the circuit adjustment mode does not appear on screen.

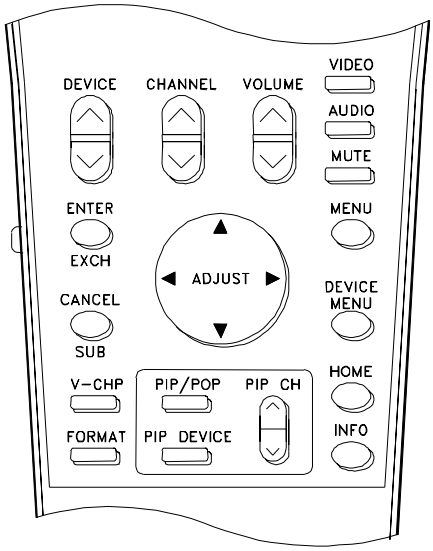

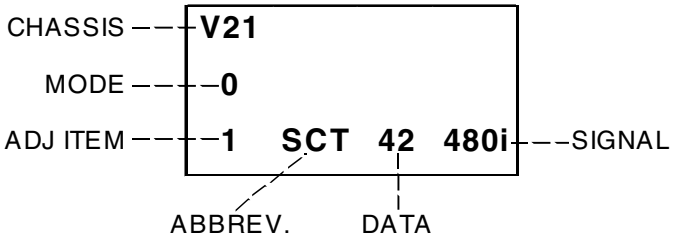

B. Selection of adjustment Functions and Adjustment Items

To select an adjustment item in the circuit adjustment mode, first select the adjustment function that includes the specific adjustment item to be selected. Then select the adjustment item. Refer to the following pages for the listing of adjustment functions and adjustment items.

1. Press the "AUDIO" button on a remote hand unit to select an adjustment function. Each time the button is pressed, the Function changes in the following sequence:

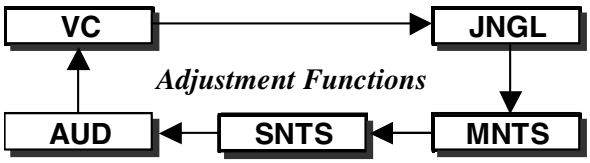

2. Press the “VIDEO” button to select a specific Adjustment Item. The Item number increases each time the “VIDEO” button is pressed.

C. Changing Data

After selecting an adjustment Item, use the “ADJUST UP/DOWN” buttons to change data.

- Press “ADJUST DOWN” to decrease the data value.
- Press “ADJUST UP” to increase the data value.

D. Saving Adjustment Data

Press “ENTER” to save adjustment data in memory. The character display turns red for approximately one second in this step.

Note: If the circuit adjustment mode is terminated without pressing “ENTER”, changes in adjustment data are not saved.

E. Terminating the Circuit Adjustment Mode

Press the "MENU" button on the remote hand unit twice to terminate the adjustment mode.

Note: The circuit adjustment mode can also be terminated by turning power OFF.

F. Toggle Between Reception Modes

Pressing "3" when in the Adjustment Mode VC Function toggles between 480i, 480p, 1080i and VGA. However data changes are not automatically saved. **Press "ENTER" to save data before pressing "3"**.

On Screen Display Position Adjustment Mode

Activation

1. Select 480i or 1080i source.
2. Press MENU-2-1-8-8

Convergence Adjustment Mode

The Convergence mode is used to perform raster geometry correction, and convergence adjustments. These adjustments must be made in both the SD (NTSC) and HD modes.

Note: Before activating the Convergence mode, turn "Video Mute" Off. The internal crosshatch pattern will not be displayed with "Video Mute" On, only a blue background is displayed.

A. Convergence Mode Activation

1. Press MENU-2-1-5-9
2. When the Convergence Mode is activated, this display appears on a Green Crosshatch.

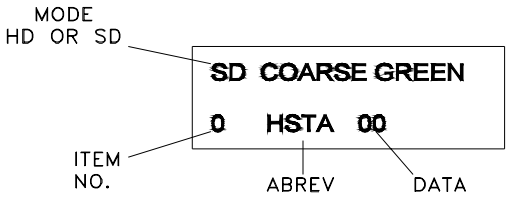

B. Selecting the HD or SD Mode

1. **Select the Signal Source** before entering the Convergence Mode, either an NTSC or HD source.

2. **Enter the Convergence Mode**
   - If the signal source is NTSC, the SD mode is activated.
   - If the signal source is HD, the HD mode is activated.

3. **Activating the HD mode when no HD signal is available**
   - Press the "DEVICE" button.
   - Use the "UP-DOWN-RIGHT-LEFT" direction buttons to select the ANT-DTV, then press "ENTER".
   - Press "MENU-0-1-5-9-5" in sequence to activate the Coarse Green HD Convergence mode.

C. Convergence Mode Functions

In the Convergence Mode there are three main Functions (Categories).

- Pressing "6" activates CONV MISC
- Pressing "5" activates COARSE CONV
- Pressing "4" activates FINE CONV

D. CONV MISC (Press 6)

This mode is used to preset data values controlling the Convergence Generator, and to perform the HV Regulation adjustment.

1. Use the VIDEO button to select an item.
2. Use the ADJUST buttons to change data.

NOTE: When Item "1 HVOL" is selected the screen goes black except for the data display. This occurs since a black screen is required when making the HV Regulation adjustment.

E. COARSE CONV (Press 5)

There are four Sub Functions in the Coarse mode, COARSE GREEN, COARSE RED, COARSE BLUE and DF.

- COARSE GREEN .... used to make Coarse Raster Geometry Adjustments.
- COARSE RED ... used to make Coarse Red Convergence Adjustments.
- COARSE BLUE ... used to make Coarse Blue Convergence Adjustments.
- DF ... used to preset data values controlling the Dynamic Beam Focus circuit drive signal.

1. Use AUDIO button to select a Sub Function
2. Use the VIDEO button to select an Adjustment Item.
3. Use the ADJUST buttons to change data.

F. FINE CONV (Press 4)

Sub Functions

This mode is used to perform Fine Raster Correction, and Fine Red and Blue Convergence Adjustments. There are three Sub Adjustment Functions, selected with the AUDIO button:

- FINE GREEN .... a Green Crosshatch is displayed, to make Fine Raster Corrections.
- FINE RED .... a White Crosshatch is displayed, to make Fine Red Convergence Adjustments.
- FINE BLUE .... a White Crosshatch is displayed, to make Fine Blue Convergence Adjustments.

Cursor

In the Fine mode a Cursor is added to the Crosshatch. The ENTER button toggles the Cursor between two modes:

- MOVE (blinking Cursor) .... use the ADJUST buttons to select any of 64 points on the Crosshatch.
- ADJUST (Non blinking Cursor) .... the ADJUST buttons adjust the active color at the current Cursor position, horizontally or vertically.

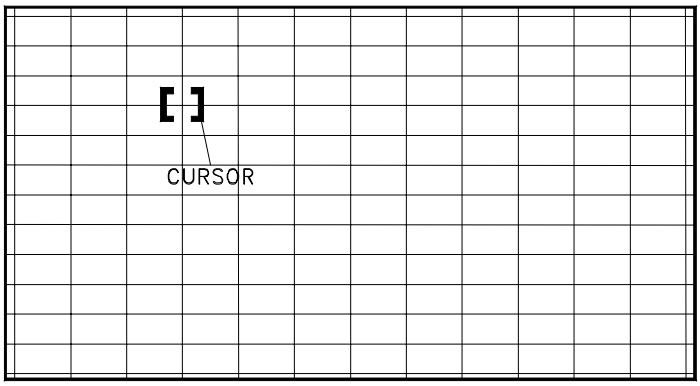

Display

The on-screen display changes in the Fine mode, as shown at the right. The display shows the vertical and horizontal data for the current Cursor Position, and the horizontal and vertical coordinates for that position.

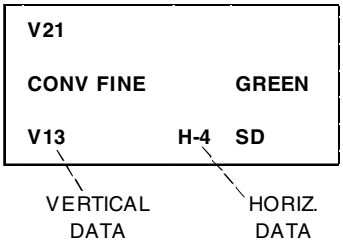

G. Saving Data and Exiting the Convergence Mode

Press MENU twice to exit the Convergence mode, data is automatically saved.

E2PROM Replacement

IC7A01 stores some adjustment data. After replacing the IC, set the data to the values given in the following tables. If good performance is not obtained, perform the Adjustments Procedures given in the Notes column.

List of Adjustment Items.

Function Display		Adjustment	Data	Initial Data				Notes
NO.	Abbrev.	Description	Range	480i	480p	1080i	VGA	
1	SCT	Picture Gain (H-Temp)	0~63	42	42	42	42	Sub Contrast
2	SBRT	Sub Brightness (H-Temp)	0~63	26	26	26	26	Black Level
3	SCOL	Sub Color (H-Temp)	0~15	7	5	3	3	Preset
4	STIN	Sub Tint	0~15	6	10	15	7	"
5	SCON	Sub Contrast (H-Temp)	0~15	2	3	3	3	"
6	RDRH	R-Drive (high)	0~63	30	30	30	30	White Balance
7	GDR	G-Drive	0~63	35	35	35	35	Preset
8	BDRH	B-Drive (high)	0~63	40	56	56	56	White Balance
9	CTRH	R-Cutoff (high)	0~63	25	25	25	25	"
10	CTGH	G-Cutoff (high)	0~63	55	55	55	55	Preset
11	CTBH	B-Cutoff (high)	0~63	40	20	20	20	White Balance
12	RDRL	R-Drive (low)	0~63	35	35	35	35	"
13	BDRL	B-Drive (low)	0~63	40	40	40	40	"
14	CTRL	R-Cutoff (low)	0~63	25	25	25	25	"
15	CTGL	G-Cutoff (low)	0~63	55	55	55	55	"
16	CTBL	B-Cutoff (low)	0~63	15	15	15	15	"
17	SCTL	Picture Gain (L-Temp)	0~63	42	42	42	42	Preset
18	SBRL	Sub Brightness (L-Temp)	0~63	26	26	26	26	User
19	SCLL	Sub Color (L-Temp)	0~15	2	2	2	2	User
20	SCNL	Color Gain (L-Temp)	0~15	0	0	0	0	"
23	COL	Color Gain	0~63	31	31	31	31	
56	VM	VM level	0~3	2	2	2	0	"
60	CRO1	CR Offset 1	0~15	10	7	7	7	Cb Cr Offset
61	CBO1	CB Offset 1	0~15	10	7	7	7	Cb Cr Offset
64	R-YR	R-Y gain of R-Y	0~15	2	7	7	7	Preset
65	R-YB	R-Y gain of B-Y	0~15	10	2	2	2	"
66	G-YR	G-Y gain of R-Y	0~15	10	8	8	8	"
67	G-YB	G-Y gain of b-y	0~15	6	11	11	11	"
69	RON	Red On	0~1	1	1	1	1	"
70	GON	Green On	0~1	1	1	1	1	"
71	BON	Blue ON	0~1	1	1	1	1	"

JNGL Function (Jungle)

IC4A01

Display		Adjustment	Data	48" Data		55" Data		65" Data		73" Data		Notes
No.	Abbrev.	Description	Range	HD	SD	HD	SD	HD	SD	HD	SD	
1	HWID	Horizontal Width	0~63	20	16	38	33	35	31	36	33	Width
2	HKEY	Horizontal Keystone	0~63	38	43	38	43	33	31	31	33	Preset
3	EWPT	EW-PCC on top	0~63	23	22	23	22	25	22	22	24	"
4	EWCT	Corner Pin (top)	0~63	32	34	32	34	37	34	31	32	
5	EWPB	EW-PCC on bottom	0~63	26	31	26	31	27	31	27	32	"
6	EWCB	Corner Pin (bottom)	0~63	29	35	29	35	35	35	31	34	
7	VHGT	Vertical Height	0~63	23	30	23	27	25	27	32	34	Height
8	VLIN	Vertical Linearity	0~15	9	9	9	9	9	9	9	9	Preset
9	VSCN	Vertical S-Correction	0~15	0	0	0	0	0	0	0	0	"
14	H-POS	Horizontal Position	0~63	30	37	30	37	30	37	30	37	"
20	V-POS	Vertical Position	0~63	31	31	31	31	31	31	31	31	"

MNTS Function (Main Decoder)

IC2E00

Function Display		Adjustment	Data	Initial Data		Notes
Item #	Abbrev.	Description	Range	RF	Non RF	
1	TNTM	Main Tint	0~63	24	24	Preset
2	COLM	Main Color	0~63	17	17	"
3	YDRM	Main Gain Control	0~31	5	5	Main Y Level
4	VPDM	Pr Pedestal Adjustment	0~15	7	7	
5	UPDM	Pb Pedestal Adjustment	0~15	7	7	

SNTS Function (Sub Decoder)

IC2H00

Function Display		Adjustment	Data	Initial	Notes
Item #	Abbrev.	Description	Range	Data	
1	TNTS	Sub Tint	0~63	26	Preset
2	COLS	Sub Color	0~63	18	"
3	YDRS	Sub Gain Control	0~31	5	Sub Y Level
4	VPDS	Pr Pedestal Adjustment	0~15	7	"
5	UPDS	Pb Pedestal Adjustment	0~15	7	"

AUDIO Function

IC3A01

Function Display		Adjustment	Data	Initial	Notes
Item #	Abbrev.	Description	Range	Data	
1	INP	Input Level Alignment	0~15	8	Input Level
2	WDE	Wideband Separator Align.	0~31	3	Separation
3	SPC	Spectral Separator Align.	0~31	3	"

OSD Horizontal Centering

(MENU-2-1-8-8)

Abbrev.	Description	Data Range	Initial Data
OSDSD	SD OSC Horizontal Position	0~960	120

DYNAMIC FOCUS

(MENU-2-1-5-9)

Item Number	Abbrev. Name	Description	Data SD&HD
1	DFH	Dynamic Focus Horizontal	-500
2	DFV	Dynamic Focus Vertical	-100

CONV MISC

(MENU-2-1-5-9-6)

Item Number	Abbrev. Name	Data SD	Data HD	Notes
1	HVOL	160		HV Adj.
2	VCNT	29	29	Preset
3	VSTR	0	0	"
4	VOFS	25	0	"
5	STLN	45	34	"
6	FPHS	288	288	"
7	CPHS	15	15	"
8	HOFS	22	22	"
9	DPHS	0	0	"
10	DOFS	51	51	"
11	TPHS	34	36	"
12	TPVD	25	39	"
13	ODEV	200	125	"
14	HRTC	1	1	"
15	DRTC	1	1	"
16	DAC	1	1	"
17	EPWP	0	0	"
18	SCRL	25	25	"
19	SDEL	600	600	"
20	FDEL	3	3	"

* Do not change "1 HVOL" if it has been previously set.

CONV GREEN Items

(MENU-2-1-5-9-5)

No.	Abbrev. Name	Description	48" Data		55" Data		65" Data		73" Data	
			SD	HD	SD	HD	SD	HD	SD	HD
1	HSTA*	Horizontal Position	0	0	0	0	0	0	0	0
2	VSTA*	Vertical Position	-15	0	-15	0	-15	0	-20	0
3	SKEW	Skew (Y axis rotation)	0	0	0	0	0	0	0	0
4	TILT	Tilt (X axis rotation)	0	0	0	0	0	0	0	0
5	HWID	Horisontal Width	30	30	30	30	30	30	20	20
6	HLIN	Horizontal Linearity	0	0	-15	-10	-10	-20	-10	-10
7	SPCC	Side Pin Cushion Correction	0	0	0	0	0	0	0	0
8	HKEY	Horizontal Keystone	0	0	0	0	0	0	0	0
9	TBPC	Top/Bottom PC Correction	-150	-150	-200	-190	-200	-170	-220	-180
10	VKEY	Vertical Keystone	15	10	15	10	0	0	10	10
11	VWID	Vertical Height	0	0	0	0	0	0	0	0
12	VLIN	Vertical Linearity.	0	0	0	0	0	0	0	0

***HSTA and VSTA must not exceed ±200**

CONV RED Items

(MENU-2-1-5-9-5)

No.	Abbrev. Name	Description	48" Data		55" Data		65" Data		73" Data	
			SD	HD	SD	HD	SD	HD	SD	HD
1	HSTA	Horizontal Position	50	50	50	50	50	50	50	50
2	VSTA	Vertical Position	0	0	0	0	0	0	0	0
3	SKEW	Skew (Y axis rotation)	0	0	0	0	0	0	0	0
4	TILT	Tilt (X axix rotation)	0	0	0	0	0	0	0	0
5	HLIN	Horixontal Linearity	-190	-190	-180	-170	-150	-150	-220	-190
6	HWID	Horizontal Width	0	-10	0	0	10	10	10	10
7	VKEY	Vertical Keystone Correction	-120	-110	-100	-95	-90	-70	-100	-110
8	VWID	Vertical Height	0	0	0	0	0	0	0	0
9	VLIN	Vertical Linearity	0	0	0	0	0	0	0	0
10	TPPC	Top/Bottom PC Correction	20	20	20	20	20	20	20	20
11	SDBW	Horizontal Side Bow	30	30	30	30	30	30	50	30

***HSTA and VSTA must not exceed ±200**

CONV BLUE Items

(MENU-2-1-5-9-5)

No.	Abbrev. Name	Description	48" Data		55" Data		65" Data		73" Data	
			SD	HD	SD	HD	SD	HD	SD	HD
1	HSTA	Horizontal Position	-50	-50	-50	-50	-50	-50	-50	-50
2	VSTA	Vertical Position	0	0	0	0	0	0	0	0
3	SKEW	Skew (Y axis rotation)	0	0	0	0	0	0	0	0
4	TILT	Tilt (X axix rotation)	0	0	0	0	0	0	0	0
5	HLIN	Horixontal Linearity	200	190	175	170	160	150	230	200
6	HWID	Horizontal Width	0	-30	0	-10	0	-10	-20	-20
7	VKEY	Vertical Keystone Correction	130	80	90	65	70	75	80	90
8	VWID	Vertical Height	0	0	0	0	0	0	0	0
9	VLIN	Vertical Linearity	0	0	0	0	0	0	0	0
10	TPPC	Top/Bottom PC Correction	0	-20	0	0	0	-20	-20	0
11	HSBW	Horizontal Side Bow	-30	-30	-30	-30	-30	-30	-30	-30

***HSTA and VSTA must not exceed ±200**

Adjustment Test Point Location

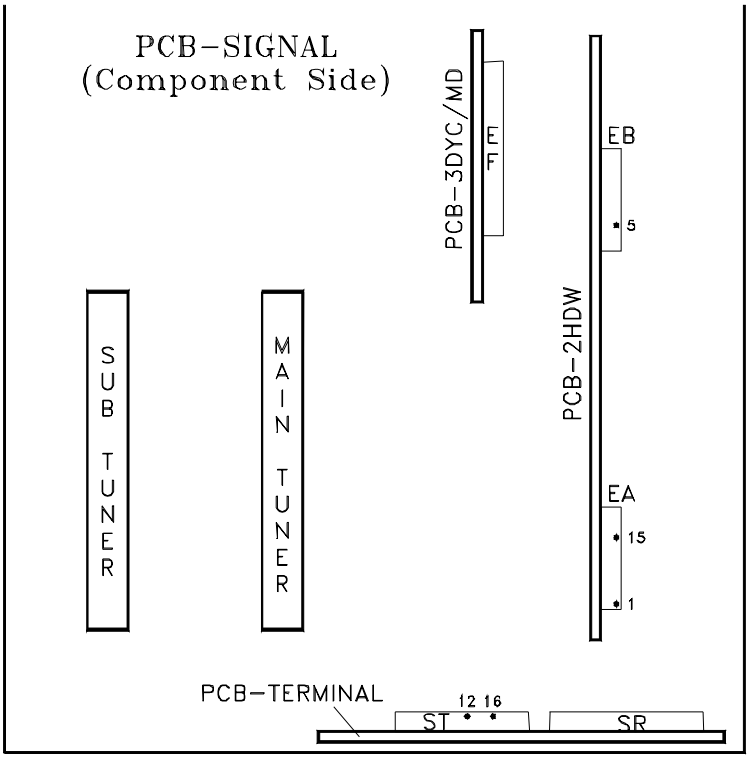

Test Points

DT pin 3 - HV Adjust
DT pin 6 - Ground
DT pin 7 - 12 Volts
DT pin 8 - ACL
EA pin 1 - Sub Picture (Y)
EA pin 15 - Main Picture (Y)
EB pin 5 - POP (Cr)
ST pin 12 - Left Audio
ST pin 16 - Right Audio
TP6(R, G or B) - CRT Cathode

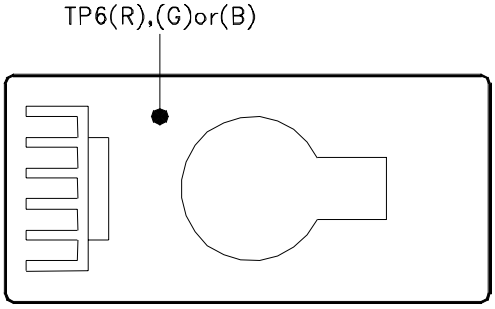

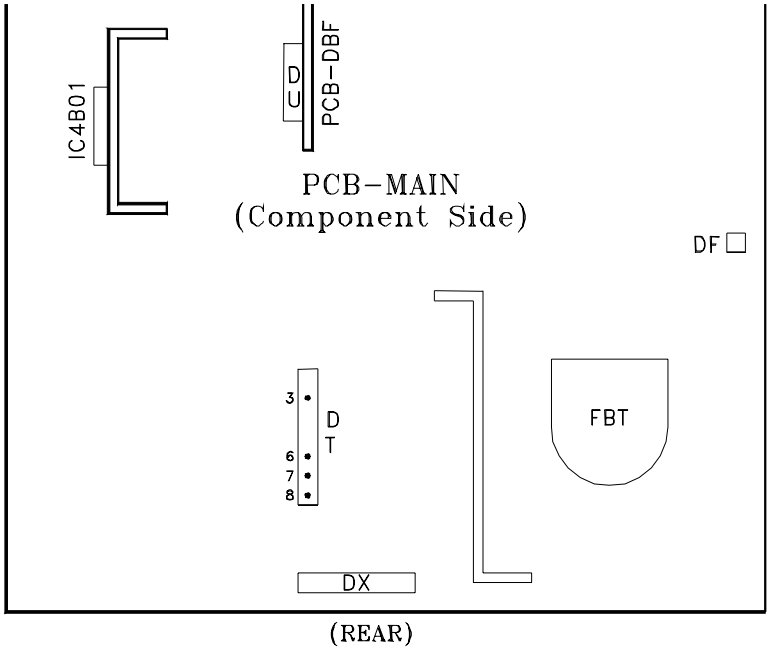

[Audio Circuit]

1. MCS Input Level

Purpose: Check the input signal level to the MCS circuit

Symptom: Distorted sound during a stereo broadcast.

Measuring Instrument	Oscilloscope
Test Point	Connector ST pins 16&12
Ext. Trigger	------
Measuring Range	50mV/Div
Input Signal	RF Stereo 300 Hz modulation
Input Terminal	RF Input

1. Supply an RF MCS signal to the Ant A input, 300 Hz at 100% modulation (25 kHz deviation) for right and left channels.
2. Connect the oscilloscope to connector ST pin 16 (Right Audio).
3. Enter the Adjustment Mode and select the Audio Function.
4. Verify that the Audio Function items are set to the data values given the table below.
5. Set the data for Item “1 INP” for 1.56 Vp-p ±0.06V. (550mv ±10mv rms)
6. Connect the oscilloscope to connector ST pin 12 (Left Audio).
7. Confirm that the left audio level at pin 12 of the ST connector is 1.56 Vp-p ±0.06V (550mv ±20mv rms).

Note: *Adjustment 2 (Stereo Separation) must be performed after this adjustment)*

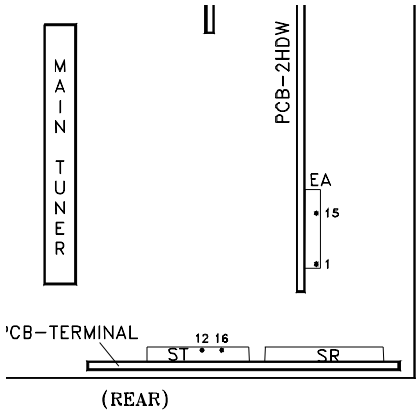

CIRCUIT ADJUST MODE

Activate …….. MENU-2-1-5-7
Function …...……..AUDIO
Item No. ……..…VIDEO
Adjust Data ……..ADJUST
Save Data …. ……ENTER
Exit ……..MENU (twice)

AUDIO Function

Item #	Abbrev.	Data
1	INP	8
3	WDE	3
4	SPC	3

[Audio Circuit]

2. Separation

Purpose Check stereo separation

Symptom: Poor stereo separation

Measuring Instrument	Oscilloscope
Test Point	Conector ST pin 16
Ext. Trigger	------
Measuring Range	10mV/Div
Input Signal	RF Stereo
Input Terminal	RF Input

Note: *This adjustment must follow Adjustment 1 (Input Level)*

1. Supply a RF Stereo Signal (dual tone stereo) to the Ant. A input.
   - Left Channel = 300 Hz modulation
   - Right Channel = no modulation
2. Connect the oscilloscope to connector ST pin 16 (Right Audio).
3. Enter the Adjustment Mode and select the Audio Function.
4. Set the data for Item “3 WDE” for minimum 300 Hz signal.
5. Change the modulation frequency to 3kHz.
6. Adjust the data for Item “4 SPC” for minimum 3kHz signal.

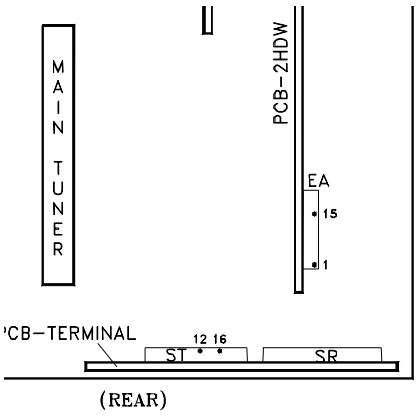

CIRCUIT ADJUST MODE

Activate …….. MENU-2-1-5-7
Function …...……..AUDIO
Item No. ……VIDEO
Adjust Data ……..ADJUST
Save Data …. ……ENTER
Exit ……..MENU (twice)

[HV Circuit]

3. HV Regulation

Purpose: To set the CRT Anode voltage.

Symptom: Dark Picture

Measuring Instrument	DC Voltmeter
Test Point	DT connector pins 3 & 6
Ext. Trigger	------
Measuring Range	-------
Input Signal	Video Signal Monoscope
Input Terminal	Video Input

Note: *This adjustment must be rechecked following Adjustment 9 CRT Cutoff.*

1. Supply a video monoscope signal.
2. Sent Contrast to maximum, and Brightness to mid position.
3. Connect a DC volt meter between pins 3 and 6 of the DT connector. (Positive lead to pin 3)
4. Activate the Conv-Misc Mode.
5. Select Item “1 HVOL” (screen goes black).
6. Adjust Item “1 HVOL” for 15.4V ±0.1V on the meter.
7. Save data and exit the Conv-Misc mode.
8. Confirm that the voltage does not change more than 0.15V.

Note: *This adjustment must be performed if E2RESET or Convergence E2RESET are activated.*

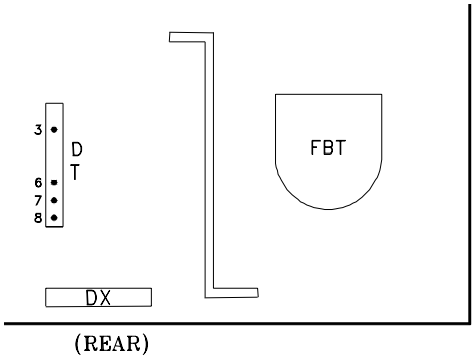

CONVERGENCE MODE

Activate ……..MENU-2-1-5-9
Misc. ……..……"6"
Coarse……..…."5"
Fine ……..."4"
Color (R,G or B)……AUDIO
Item No……..VIDEO
Adjust/Move…….ADJUST
Cursor Toggle……..ENTER
Save & Exit…..MENU (twice)

[Video Circuit]

4. Main/Sub Y Level

Purpose To set picture luminance

Symptom: Excess or insufficient brightness.

Measuring Instrument	Oscilloscope
Test Point	EA connector pins 15 & 1
Ext. Trigger	------
Measuring Range	------
Input Signal	Color Bars
Input Terminal	Video Input

1. Supply a color bar signal to a Video Input (not an RF input).
2. Select the color bar signal for both the main and sub pictures.
3. Connect the oscilloscope to connector EA pin 15.
4. Activate the Adjustment Mode
5. Select Item “3 YDRM” in the MNTS function.
6. Adjust the data for 0.7 Vp-p max. - 0.67 Vp-p min. at EA pin 15. (If it cannot be adjusted within this range, set to the lower value)
7. Move the oscilloscope to EA pin 1.
8. Select Item “3 YDRS” in the Sub Matrix function.
9. Adjust the data to equal the MAIN-Y Gain (+0.01V -0.04V).

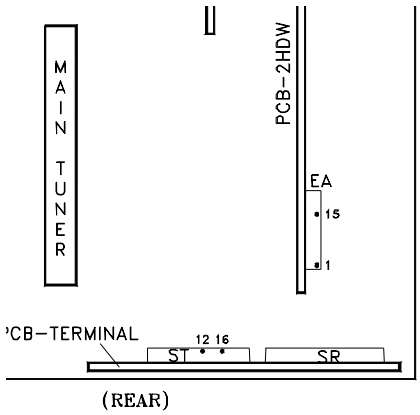

CIRCUIT ADJUST MODE

Activate …….. MENU-2-1-5-7
Function …...……..AUDIO
Item No. ……VIDEO
Adjust Data ……..ADJUST
Save Data …. ……ENTER
Exit ……..MENU (twice)

[Video Circuit]

5. Side by Side Sub Picture Tint

Purpose: To match the sub picture color to that of the main picture.

Symptom: Main and sub pictures colors differ.

Measuring Instrument	-----
Test Point	-----
Ext. Trigger	------
Measuring Range	------
Input Signal	NTSC
Input Terminal	Video

1. Supply an NTSC signal to an External Video Input.
2. Select the NTSC signal as the source for both the main and sub pictures.
3. Activate Side by Side POP
3. Activate the Adjustment mode.
4. Select Item “1 TNTS” in the SNTS Function.
5. Adjust data to match the sub picture color to that of the main picture.
   (If “1 TNTS” range is short, adjust Items “4 VPDS” and “5 UPDS”)

CIRCUIT ADJUST MODE

Activate …….. MENU-2-1-5-7
Function …...……..AUDIO
Item No. ……..……VIDEO
Adjust Data ….……..ADJUST
Save Data …. ……ENTER
Exit ……...MENU (twice)

[Video Circuit]

6. Side by Side Sub Color

Purpose To set the sub picture color level.

Symptom: Main and sub pictures color levels differs.

Measuring Instrument	Oscilloscope
Test Point	EB connector pin 5
Ext. Trigger	------
Measuring Range	200mV/div 20usec/div
Input Signal	Color Bars
Input Terminal	Video Input

Note: *Let the set run for at least one minute before making this adjustment.*

1. Supply a color bar signal.
2. Select the color bar signal as the source for both the main and sub picture.
3. Connect an oscilloscope to pin 5 of the EB connector (Cr signal).
4. Activate the Side by Side mode.
5. Activate the Service Mode
6. Select Item “2 COLS” in the SNTS function.
7. Adjust data so the amplitude of the Sub signal equals that of the main signal.

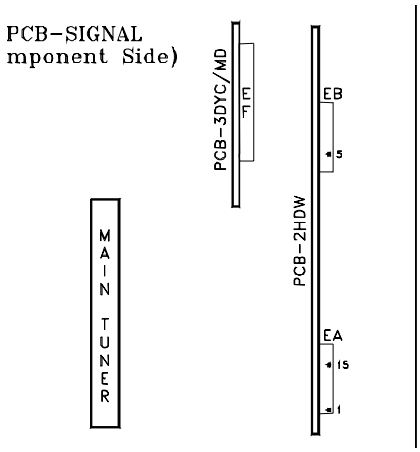

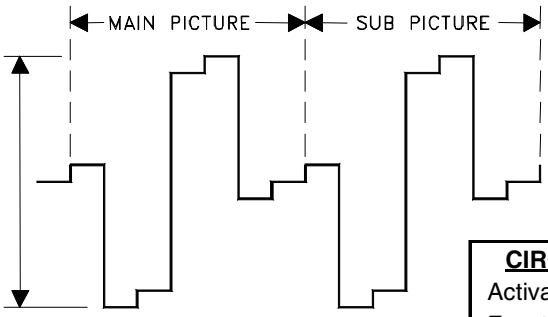

CIRCUIT ADJUST MODE

Activate …….. MENU-2-1-5-7
Function …...……..AUDIO
Item No. ……..……VIDEO
Adjust Data ….……..ADJUST
Save Data …. ……ENTER
Exit ……...MENU (twice)

[CRT Circuit]

7. CRT Cutoff

Purpose: To set the cutoff point for all three CRTs.

Symptom: Monochrome has a color tint, or incorrect brightness.

Measuring Instrument	Oscilloscope
Test Point	TP6R, TP6G, TP6B
Ext. Trigger	------
Measuring Range	50V/Div. 2msec/Div.
Input Signal	None
Input Terminal	Video Input

Note: ***Use the Expand mode (full screen)***

1. Select an External Input with no signal.
2. Enter the Adjustment Mode, VC Function.
3. Press “1”, automatically blanks the screen and sets COL to 0.
4. Set the data to the values given in the table below.
5. Connect the oscilloscope to TP6R.
6. Adjust the Red Screen VR so the black level is 180V, as shown below, or 186V ±1VDC using an DC Voltmeter.
7. Repeat Steps 4 and 5 to set the Blue and Green Screen VRs, using TP6G and TP6B.

Note: *White Balance must be performed after this adjustment.*

Cutoff Preset VC Data

Item	Abbr	Data
1	SCT	42
2	SBRT	26
5	SCON	2
6	RDRH	30
7	GDR	35
8	BDRH	40
9	CRTH	25
10	CTGH	55
11	CTBH	20

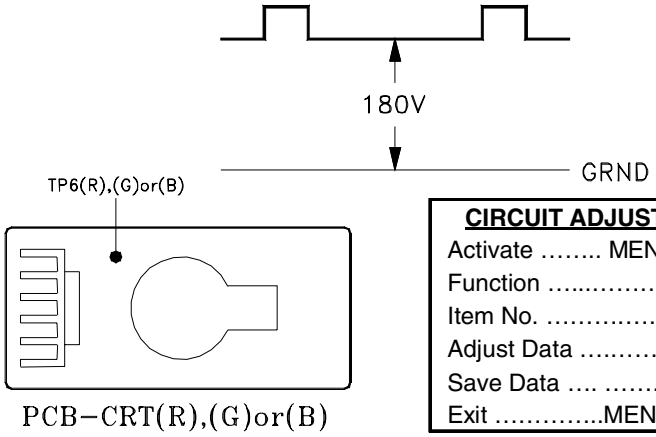

CIRCUIT ADJUST MODE

Activate …….. MENU-2-1-5-7
Function …..……AUDIO
Item No. ……VIDEO
Adjust Data ….……ADJUST
Save Data …. ……ENTER
Exit ……..MENU (twice)

[CRT Circuit]

8. White Balance (NTSC)

Purpose To set the CRTs white level in the NTSC mode.

Symptom: Monochrome has a color tint.

Measuring Instrument	DC ma meter
Test Point	------
Ext. Trigger	------
Measuring Range	------
Input Signal	NTSC White Raster
Input Terminal	RF or Video

Note: ***Use the “FORMAT” button to activate the Expand mode (full screen).***

1. Supply a full White Raster Signal
2. Activate the Service Mode, VC function.
3. Set the data for Item “23 COL” to 0.
4. Adjust Items “6 RDRH” and “8 BDRH” for optimum white at the center of the screen.
5. Reduce the input luminance level to 25%.
6. Adjust Items “9 CTRH” and “11 CTBH” for optimum white.
7. Insert a Milliammeter in series with each CRT Cathode. The maximum allowable current for each CRT is given in the table below.
8. Set the white raster to 100% and adjust Items “12 RDRL” and “13 BDRL” for optimum white at the center of the screen.
9. Reduce the luminance level to 25%.
10. Adjust Item “14 CTRL” and “16 CTBL” for optimum white.
11. Set the data for Item “23 COL” back to 31.

CIRCUIT ADJUST MODE

Activate …….. MENU-2-1-5-7
Function …..……AUDIO
Item No. ……VIDEO
Adjust Data ….……ADJUST
Save Data …. ……ENTER
Exit ……..MENU (twice)

Maximum CRT Current

CRT	55"& 65" CURRENT	73" CURRENT
RED	580 uA	900 uA
GREEN	580 uA	900 uA
BLUE	580 uA	900 uA

[CRT Circuit]

9. White Balance (HD)

Purpose: To set the CRTs white level in the HD mode.

Symptom: Monchrome pictures have a color tint.

Measuring Instrument	-----
Test Point	-----
Ext. Trigger	------
Measuring Range	-----
Input Signal	HD White Raster
Input Terminal	DTV Inputs

1. Supply an HD Full White Raster signal to the DTV Inputs.
2. Select the DTV Inputs (Input button)
3. Activate the Adjustment mode, VC Function.
4. Set Item “23 COL” to 0.
5. Adjust Items “6 RDRH” and “8 BDRH” for optimum white at the center of the screen.
6. Reduce the input signal luminance to 25%.
7. Adjust Items “9 CTRH” and “11 CTBH” for optimum white.
8. Set the data for Item “23 COL” back to 31.

CIRCUIT ADJUST MODE

Activate …….. MENU-2-1-5-7
Function …...……..AUDIO
Item No. ……..……VIDEO
Adjust Data ….……..ADJUST
Save Data …. ……ENTER
Exit ……..MENU (twice)

[CRT Circuit]

10. Cb, Cr Offset

Purpose To set Cb and Cr color signal level.

Symptom: Incorrect colors.

Measuring Instrument	-----
Test Point	-----
Ext. Trigger	------
Measuring Range	------
Input Signal	White Raster (HD&NTSC)
Input Terminal	Video & DTV Inputs

1. Supply an NTSC White Raster (25% luminance) signal to a Video Input.
2. Activate the Adjust Mode, VC Function
3. Set Item “23 COL” data to 63.
4. Adjust Items “60 CRO1” and “61 CBO1” for optimum white.
5. Set Item “23 COL” data to 31.
6. Save data and Exit the Service Mode.

CIRCUIT ADJUST MODE

Activate …….. MENU-2-1-5-7
Function …...……..AUDIO
Item No. ……..……VIDEO
Adjust Data ….……..ADJUST
Save Data …. ……ENTER
Exit ……..MENU (twice)

[Video Circuit]

11. Black Level

Purpose: To set the black level of the picture.

Symptom: Excess or insufficient brightness.

Measuring Instrument	-----
Test Point	-----
Ext. Trigger	------
Measuring Range	------
Input Signal	Monoscope
Input Terminal	Video Input

1. Supply a Monoscope signal to a Video Input.
2. Activate the Adjust Mode, VC Function.
3. Adjust Item “2 SBRT” so the 0% and 10% black levels on the gradation scale are the same.
4. Press ENTER to save data.
7. Exit the Service Mode.

CIRCUIT ADJUST MODE

Activate …….. MENU-2-1-5-7
Function …...……..AUDIO
Item No. ……VIDEO
Adjust Data ……..ADJUST
Save Data …. ……ENTER
Exit ……..MENU (twice)

40%	30%	20%	10%
50%	0%	0%	0%
60%	70%	80%	90%

GRADATION SCALE

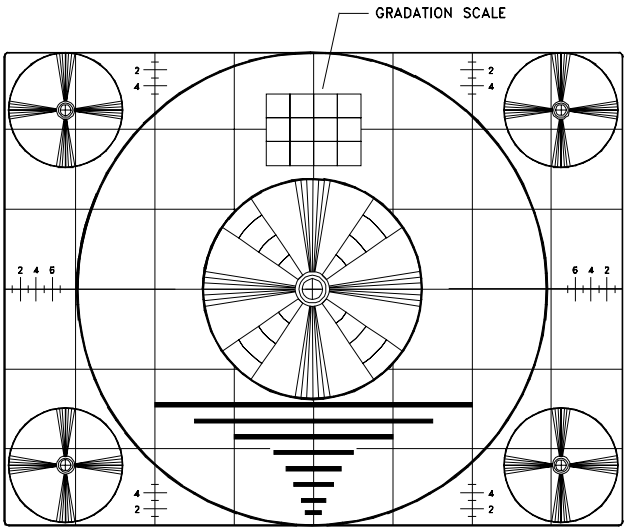

[Video Circuit]

12. Sub Contrast

Purpose To set overall beam current to its’ optimum level.

Symptom: Excess or insufficient contrast.

Measuring Instrument	DC ma meter
Test Point	DT connector pins 7 & 8
Ext. Trigger	------
Measuring Range	-----
Input Signal	Grayscale
Input Terminal	RF Input

Note: Activate the Expand mode (full screen).

1. Supply a Grayscale signal to a RF Input.
2. Activate the Adjust Mode, VC Function.
3. Select Item “1 SCT”, signal level automatically reduces.
4. Connect a 3ma DC meter between DT connector pins 7 and 8. Positive lead to pin 7.
5. Adjust Item “1 SCT” to the values given in the Table below.

MODEL	CURRENT
45 inch models	540 ±5ua
55 inch and 65 inch models	595 ±5ua
73 inch models	620 ±5ua

6. Remove the meter.
7. Save data and Exit the Service Mode.

CIRCUIT ADJUST MODE

Activate …….. MENU-2-1-5-7
Function …...……..AUDIO
Item No. ……VIDEO
Adjust Data ……..ADJUST
Save Data …. ……ENTER
Exit ……..MENU (twice)

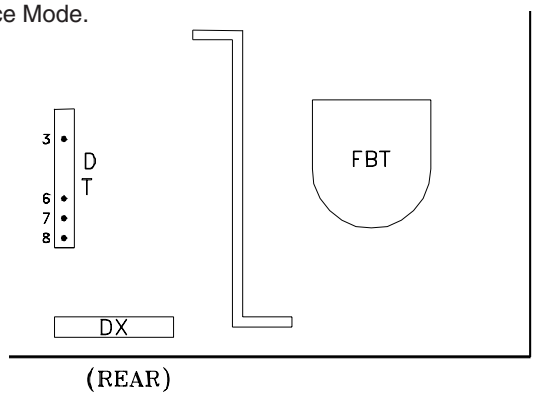

[Focus Circuit]

13. Dynamic Focus Preset

Purpose: To improve edge focus.

Symptom: Poor focus at the edges of the screen.

Measuring Instrument	-----
Test Point	-----
Ext. Trigger	------
Measuring Range	-----
Input Signal	Monoscope
Input Terminal	Video Input

1. Supply a Monoscope signal to a Video Input
2. Activate the Convergence Mode.
3. Select the DF Function under the Conv. Coarse Mode.
4. Set Items “0 DFH” and “1 DFV” to the data values given in the DF Table.
5. Press “6” to activate CONV-MISC
6. Set “0 FPHS” and “1 DPHS” to data values given in the CONV-MISC Table.
5. Exit the Conv. Mode.

CONVERGENCE MODE

Activate ……..MENU-2-1-5-9
Misc. ……..……"6"
Coarse……..…."5"
Fine ……..."4"
Color (R,G or B)……AUDIO
Item No……..…..VIDEO
Adjust/Move…….ADJUST
Cursor Toggle……..ENTER
Save & Exit…..MENU (twice)

DF
(MENU-2-1-5-9-5)

Item	Abbr.	Data
1	DFH	-500
2	DFV	-100

CONV MISC
(MENU-2-1-5-9-6)

Item	Abbr.	Data
9	DPHS	0
10	DOFS	51

[Video Circuit]

14. Lens Focus

Purpose To set the Lens position for optimum focus.

Symptom: Poor focus

Measuring Instrument	-----
Test Point	------
Ext. Trigger	------
Measuring Range	-----
Input Signal	Monoscope
Input Terminal	Video Input

Note: *This adjustment must be done before Electrostatic Focus. Perform this adjustment for RED, GREEN, and BLUE monochrome pictures.*

1. Supply a VIDEO signal (Monoscope).
2. Cover the Red and Blue Lens (producing a green raster).
3. Adjust the Green Lens for best focus at the center of the Monoscope pattern.

   Note: *Attach a white paper to the screen center. During adjustment, observe the picture on the screen from inside for easier adjustment.*

4. Repeat Steps 2 and 3 for the Red and Blue monochrome pictures.

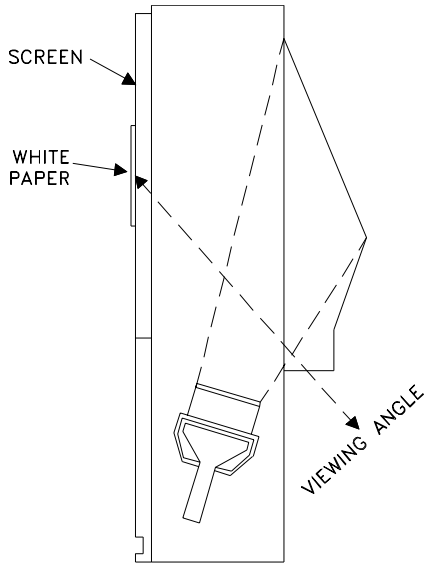

[CRT Circuit]

15. Electrostatic Focus & (Alignment Magnet)

Purpose: To set electrostatic focus to the optimum point.

Symptom: Poor focus.

Measuring Instrument	-----
Test Point	-----
Ext. Trigger	------
Measuring Range	------
Input Signal	Monscope & Crosshatch
Input Terminal	Video Input

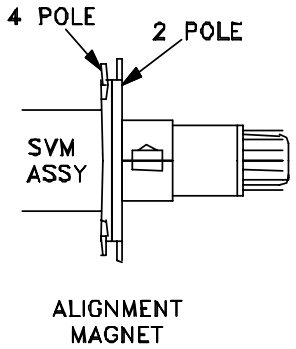

Note: *This adjustment must be performed after the Sub Contrast adjustment.*

Alignment Magnet Adjustment (WS-55711 / 65611 / 65711 / 65712 / 73711 Only)

This adjustment must be performed before Static Focus Adjustment

1. Supply a Crosshatch with Center Dot signal to a Video Input.
2. Set the display format to Standard (Format button)
3. Select a Green raster using the table below.
4. Roughly adjust Green Focus VR.
5. Rotate Green Focus VR CCW so the center dot is about 10mm diameter.
6. Adjust the Green 4 Pole Magnet for the roundest center dot.
7. Set the Green Focus VR for optimum focus.
8. Repeat the procedure with a Red raster and adjust the Red 4 Pole Magnet.
9. Use silicon to lock the magnets in place.

Static Focus Adjustment (All Models)

1. Supply a Monoscope signal to a Video Input
2. Activate A/V Reset
3. Select Red, Green or Blue rasters using the table below.
3. Set the Red, Green and Blue Focus VRs for optimum focus in the center of the picture.

Raster Color Selection

Color Raster	Activation Code
Red	MENU-2-1-5-9-1
Green	MENU-2-1-5-9-2
Blue	MENU-2-1-5-9-3

[On Screen Display]

16.Character Position

Purpose To position the character display horizontally.

Symptom: Incorrect display position

Measuring Instrument	-----
Test Point	-----
Ext. Trigger	------
Measuring Range	------
Input Signal	Video Signal (HD/NTSC)
Input Terminal	ANT-A/DTV

1. Supply an NTSC signal to Ant-A and select Ant-A as the source.
2. Enter the OSD Position Mode, press “MENU-2-1-8-8”.
3. Adjust “OSDSD” to center the OSD horizontally.
4. Press “MENU” to save data and exit the mode.
5. Supply a HD signal to the DTV inputs and select the DTV Inputs as the source.
6. Enter the OSD Position Mode, press “MENU-2-1-8-8”.
7. Adjust “OSDHD” to center the OSD horizontally.
3. Press “MENU” to save data and exit the mode.

[Conv/Defl]

17. Geometry Preset

Purpose: To preset data controlling raster geometry

Symptom: Raster distortion.

Measuring Instrument	-----
Test Point	------
Ext. Trigger	------
Measuring Range	-----
Input Signal	NTSC & HD
Input Terminal	Video & DTV Inputs

Note: *This procedure is usually only necessary if an E2PROM is replaced in the TV Control, DM or Convergence circuits.*

Procedure

In the Circuit Adjustment and Coarse Convergence Modes pre-set the data to the values given in the Tables below.

DEFL JUNGLE (MENU-2-1-5-7)

No.	Abbrev.	48" Data		55" Data		65" Data		73" Data	
		SD	HD	SD	HD	SD	HD	SD	HD
1	HWID	16	20	33	38	31	35	33	36
2	HKEY	43	38	43	38	31	33	33	31
3	EWPT	22	23	22	23	22	25	24	22
5	EWPB	34	26	31	26	31	27	32	27
7	VHGT	30	23	27	23	27	35	34	32
8	VLIN	9	9	9	9	9	9	9	9
9	VSCN	0	0	0	0	0	0	0	0
20	VPOS	31	31	31	31	31	31	31	31

CONV GREEN (MENU-2-1-5-9-5)

No.	Abbrev.	48" Data		55" Data		65" Data		73" Data	
		SD	HD	SD	HD	SD	HD	SD	HD
1	HSTA	0	0	0	0	0	0	0	0
2	VSTA	-15	0	-15	0	-15	0	-20	0
3	SKEW	0	0	0	0	0	0	0	0
4	TILT	0	0	0	0	0	0	0	0
5	HWID	30	30	30	30	30	30	20	20
6	HLIN	0	0	-15	-10	-10	-20	-10	-10
7	SPCC	0	0	0	0	0	0	0	0
8	HKEY	0	0	0	0	0	0	0	0
9	TBPC	-150	-150	-200	-190	-200	-170	-220	-180
10	VKEY	15	10	15	10	0	0	10	10
11	VWID	0	0	0	0	0	0	0	0
12	VLIN	0	0	0	0	0	0	0	0

CIRCUIT ADJUST MODE

Activate …….. MENU-2-1-5-7
Function …..……..AUDIO
Item No. ……..……VIDEO
Adjust Data ….……..ADJUST
Save Data …. ……ENTER
Exit ……..MENU (twice)

CONV RED (MENU-2-1-5-9-5)

No.	Abbrev.	48" Data		55" Data		65" Data		73" Data	
		SD	HD	SD	HD	SD	HD	SD	HD
1	HSTA	50	50	50	50	50	50	50	50
2	VSTA	0	0	0	0	0	0	0	0
3	SKEW	0	0	0	0	0	0	0	0
4	TILT	0	0	0	0	0	0	0	0
5	HLIN	-190	-190	-180	-170	-150	-150	-220	-190
6	HWID	0	-10	0	0	10	10	10	10
7	VKEY	-120	-110	-100	-95	-90	-70	-100	-110
8	VWID	0	0	0	0	0	0	0	0
9	VLIN	0	0	0	0	0	0	0	0
10	TBPC	20	20	20	20	20	20	20	20
11	HSBW	30	30	30	30	30	30	30	30

CONVERGENCE MODE

Activate ……..MENU-2-1-5-9
Misc. ……..……"6"
Coarse……..…"5"
Fine ……..."4"
Color (R,G or B)……AUDIO
Item No……..…..VIDEO
Adjust/Move…….ADJUST
Cursor Toggle……..ENTER
Save & Exit…..MENU (twice)

CONV RED (MENU-2-1-5-9-5)

No.	Abbrev.	48" Data		55" Data		65" Data		73" Data	
		SD	HD	SD	HD	SD	HD	SD	HD
1	HSTA	-50	-50	-50	-50	-50	-50	-50	-50
2	VSTA	0	0	0	0	0	0	0	0
3	SKEW	0	0	0	0	0	0	0	0
4	TILT	0	0	0	0	0	0	0	0
5	HLIN	200	190	175	170	160	150	230	200
6	HWID	0	-30	0	-10	0	-10	-20	-20
7	VKEY	130	80	90	65	70	75	80	90
8	VWID	0	0	0	0	0	0	0	0
9	VLIN	0	0	0	0	0	0	0	0
10	TBPC	0	-20	0	0	0	-20	-20	0
11	HSBW	-30	30	-30	30	-30	30	-30	30

[Deflection Circuit]

18: Deflection Geometry Height & Width Adjustment

Purpose: To set the height, width and linearity of the raster.

Symptom: Incorrect height, width and/or linearity.

Measuring Instrument	-----
Test Point	-----
Ext. Trigger	------
Measuring Range	-----
Input Signal	Monoscope (NTSC & HD)
Input Terminal	Video & DTV Inputs

CIRCUIT ADJUST MODE

Activate …….. MENU-2-1-5-7
Function …...……..AUDIO
Item No. ……..……VIDEO
Adjust Data ……..ADJUST
Save Data …. ……ENTER
Exit ……..MENU (twice)

Note:
Always use the *Standard Format* when aligning Geometry and Convergence.

Preliminary:
1. DO NOT change the initial values for "#8 VLIN" in the Defl. Jungle Function.
2. DO NOT exceed the following VHGT adjustment ranges:
   NTSC ... from -4 to +10
   HD ... from -10 TO +5

NTSC Mode
1. Supply an NTSC Monoscope signal to a Video Input.
2. Select the Monoscope as the signal source.
3. Activate the Adjustment Mode, JNGL Function.
4. Select and adjust each of the following items.
   - "7 VHGT" ... so the vertical marker sum = 4
   - "1 HWD" ... so the horizontal marker sum = 7
5. Save data and Exit the Service Mode.

HD Mode
1. Supply an HD Monoscope signal to the DTV HD Inputs.
2. Select the DTV Inputs as the signal source (Input button)
3. Activate the Service Mode, Defl. Jungle Function.
4. Select and adjust each of the following items.
   - "7 VHGT" ... so the vertical marker sum = 2
   - "1 HWD" ... so the horizontal marker sum = 5
5. Save data and Exit the Service Mode.

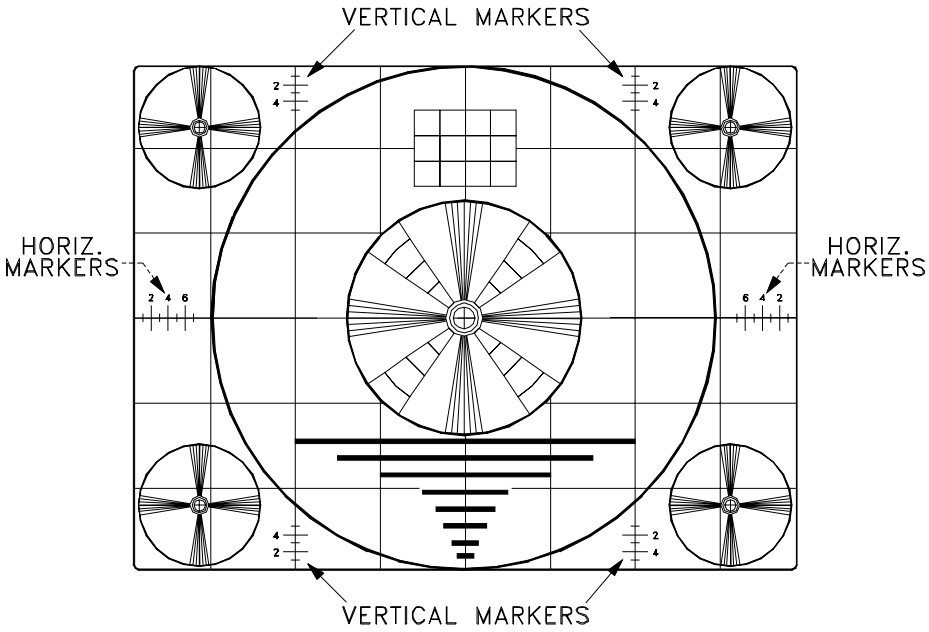

[Convergence Circuit]

19. Convergence Geometry Adjustment

Purpose: To set the Convergence circuit geometry adjustments.

Symptom: Raster distortion at the top, bottom or sides of the picture.

Measuring Instrument	-----
Test Point	------
Ext. Trigger	------
Measuring Range	-----
Input Signal	NTSC -- None HD -- HD sync
Input Terminal	Video & DTV Inputs

Note: *Deflection Circuit Geometry must be performed before this adjustment.*

Note:
Always use the *Standard Format* when aligning Geometry and Convergence.

NTSC mode

1. Select a Video Input with no signal.
2. Activate the Convergence Mode, Coarse Green.
3. Adjust the Coarse Green Items shown below for straight crosshatch lines.
4. Select the Fine Green Mode, a Cursor is displayed on the crosshatch.
5. Use the Cursor to adjust for straight crosshatch lines.
6. Exit the Convergence Mode.

HD mode

1. Supply horizontal and vertical HD sync to the DTV Inputs and select the DTV Inputs as the source.
   Note: I*f an HD signal is not available, select Ant-DTV, with no signal, as the source.*
2. Enter the Convergence Mode, Coarse Green.
3. Repeat NTSC Steps 3 through 6 in the HD mode.

CONVERGENCE MODE

Activate ……..MENU-2-1-5-9
Misc. ……..……"6"
Coarse……..…"5"
Fine ……..."4"
Color (R,G or B)……AUDIO
Item No……..…..VIDEO
Adjust/Move…….ADJUST
Cursor Toggle……..ENTER
Save & Exit…..MENU (twice)

COARSE GREEN ADJUSTMENTS

3 SKEW

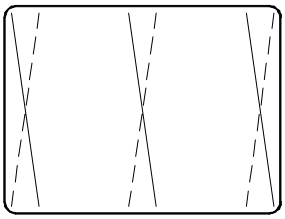

4 TILT

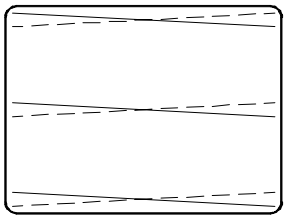

6 HLIN

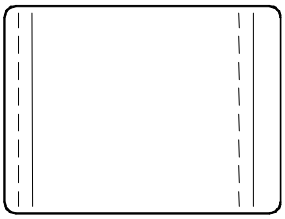

7 SPCC

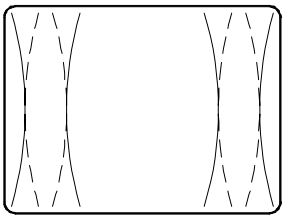

8 HKEY

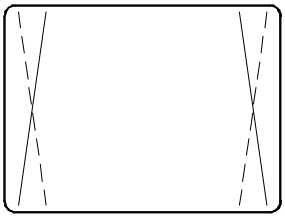

9 TBPC

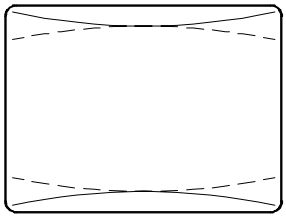

10 VKEY

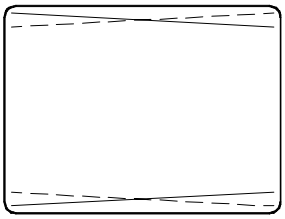

12 VLIN

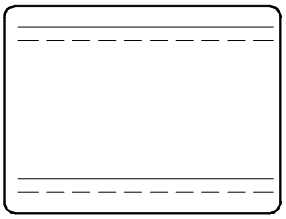

[Convergence Circuit]

20. Centering and Static Convergence

Purpose: To converge red, green and blue at the center of the screen

Symptom: Color edging over the entire picture.

Measuring Instrument	-----
Test Point	-----
Ext. Trigger	------
Measuring Range	-----
Input Signal	NTSC -- Monoscope HD -- Monoscope
Input Terminal	Video & DTV Inputs

Preliminary

Degauss the shield cover and bracket unit of the CRT assembly and chassis.
DO NOT degauss the CPM Assemblies.

HD mode

1. Supply an HD Monoscope signal to the DTV Inputs.
2. Select the DTV Inputs as the signal source (Input button).
3. Enter the Convergence Coarse mode.
4. Set the data for the “HSTA” and “VSTA” items to:

GREEN	RED	BLUE
HSTS = 0	HSTA = 50	HSTA = -50
VSTA = 0	VSTA = 0	VSTA = 0

5. In the Coarse Green mode:
   - Center the Green Raster using the Green Centering Magnet.
   - Rotate the Green Deflection Yoke to correct any tilt.
6. In the Coarse Red mode, use the Red Centering Magnet to converge red on the green at the center of screen. Correct any red tilt with the Red Deflection Yoke.
7. In the Coarse Blue mode, repeat Step 6 using the Blue Centering magnet and the Blue Deflection Yoke.
8. Exit the Convergence mode.

CONVERGENCE MODE

Activate ……..MENU-2-1-5-9
Misc. …….……"6"
Coarse……..…"5"
Fine ……..."4"
Color (R,G or B)……AUDIO
Item No……..…..VIDEO
Adjust/Move…….ADJUST
Cursor Toggle……..ENTER
Save & Exit…..MENU (twice)

SD mode

1. Supply an NTSC Monoscope signal to a Video Input.
2. Select the Monoscope as the signal source (Input button).
3. Enter the Convergence Coarse Green mode.
4. Confirm that the Green Raster is centered.

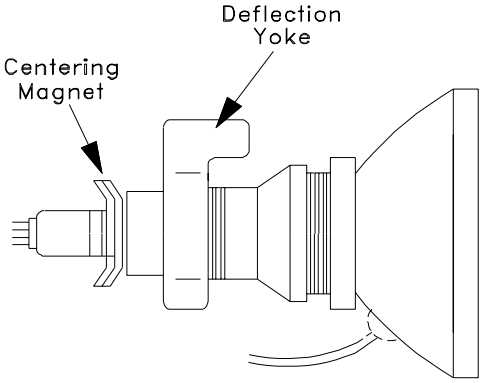

[Convergence Circuit]

21. Coarse Convergence

Purpose: To converge red and blue on green at the edges of the screen.

Symptom: Color edging at the top, bottom and sides of the screen.

Measuring Instrument	-----
Test Point	------
Ext. Trigger	------
Measuring Range	-----
Input Signal	NTSC -- None HD -- HD sync
Input Terminal	Video & HD Inputs

CONVERGENCE MODE

Activate ……..MENU-2-1-5-9
Misc. ……"6"
Coarse……..…"5"
Fine ……..."4"
Color (R,G or B)……AUDIO
Item No……..VIDEO
Adjust/Move…….ADJUST
Cursor Toggle……..ENTER
Save & Exit…..MENU (twice)

Note:
Always use the *Standard Format* when aligning Geometry and Convergence.

SD mode

1. Select an External Input with no signal.
2. Activate the Convergence Mode, Coarse Red.
3. Adjust the Items shown below to converge the red on the green.
4. Select Coarse Blue mode.
5. Adjust the Items shown below to converge the blue on the green.
   Note: *If center convergence shifts, use red and blue Items "0 HSTA" and "1 VSTA" to correct the shift.*
6. Exit the Convergence Mode.

HD mode

1. Supply horizontal and vertical HD sync to the DTV Inputs and select the DTV Inputs as the source.
   Note: I*f an HD signal is not available, select Ant-DTV, with no signal, as the source.*
2. Repeat SD Steps 2 through 5 in the HD mode.
3. Exit the Convergence mode.

COARSE CONVERGENC RED & BLUE ADJUSTMENTS

1 HSTA*

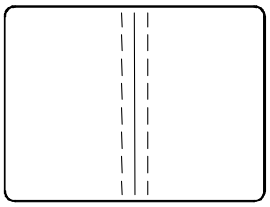

2 VSTA*

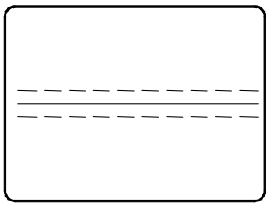

3 SKEW

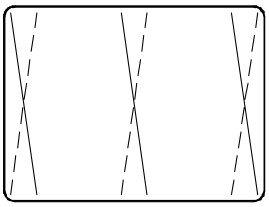

4 TILT

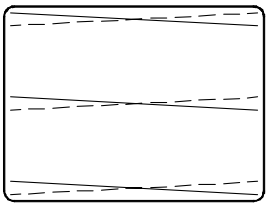

5 HLIN

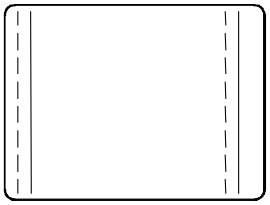

6 HWID

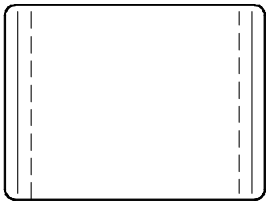

7 VKEY

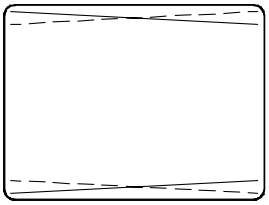

8 VWID

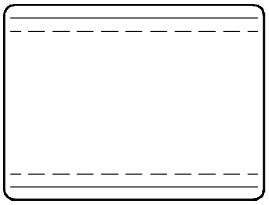

9 VLIN

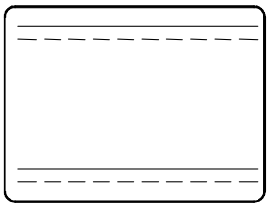

10 TBPC

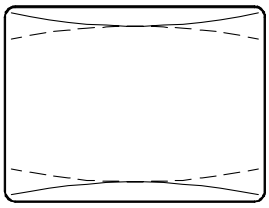

11 HSBW

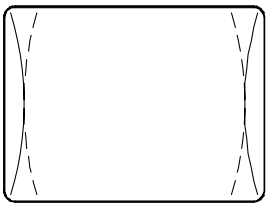

* Data should not exceed ±100

[Convergence Circuit]

22. Fine Convergence

Purpose: To converge red, green and blue at the edges of the screen

Symptom: Color edging at the edges of the picture.

Measuring Instrument	-----
Test Point	-----
Ext. Trigger	------
Measuring Range	-----
Input Signal	NTSC -- None HD -- HD sync
Input Terminal	Video & DTV Inputs

CONVERGENCE MODE

Activate ……..MENU-2-1-5-9
Misc. …….……"6"
Coarse……..…"5"
Fine ……..."4"
Color (R,G or B)……AUDIO
Item No……..…..VIDEO
Adjust/Move…….ADJUST
Cursor Toggle……..ENTER
Save & Exit…..MENU (twice)

Note:
Always use the *Standard Format* when aligning Geometry and Convergence.

SD Fine Adjustment

1. Select an External Input, no signal.
2. Activate the Convergence Mode, Fine Red.
3. Use the Cursor to converge red on the green.
4. Select the Fine Blue mode.
5. Use the Cursor to converge blue on the green.
6. Exit the Convergence mode.

HD Fine Adjustment

1. Supply an HD signal (sync only) to the DTV inputs and select DTV with the "Audio" button.
   Note: I*f an HD signal is not available, select Ant-DTV, with no signal, as the source.*
2. Repeat SD Fine Adjustment Steps 2 through 6, in the HD mode.

CHIP PARTS REPLACEMENT

Some resistors, shorting jumpers (0 Ohm resistors), ceramic capacitors, transistors and diodes are chip parts. The following precautions should be taken when replacing these parts.

Cautions:

1. Use a fine tipped, well insulated soldering iron (approximately 30 watts), and tweezers.
2. Melt the solder and remove the chip parts carefully so as not to tear the copper foil from the printed circuit board.
3. Discard removed chips; do not reuse them.
4. Do not apply heat for more than 3 (three) seconds to new chip parts.
5. Avoid using a rubbing stroke when soldering.
6. Take care not to scratch, or damage the chip parts when soldering.
7. Supplementary cementing is not required.

Chip Parts Removal (Resistors, Capacitors, etc.)

1. Grasp the part with tweezers. Melt the solder at both sides alternately, and remove one side of the part with a twisting motion.
2. Melt the solder at the other side and remove the part.

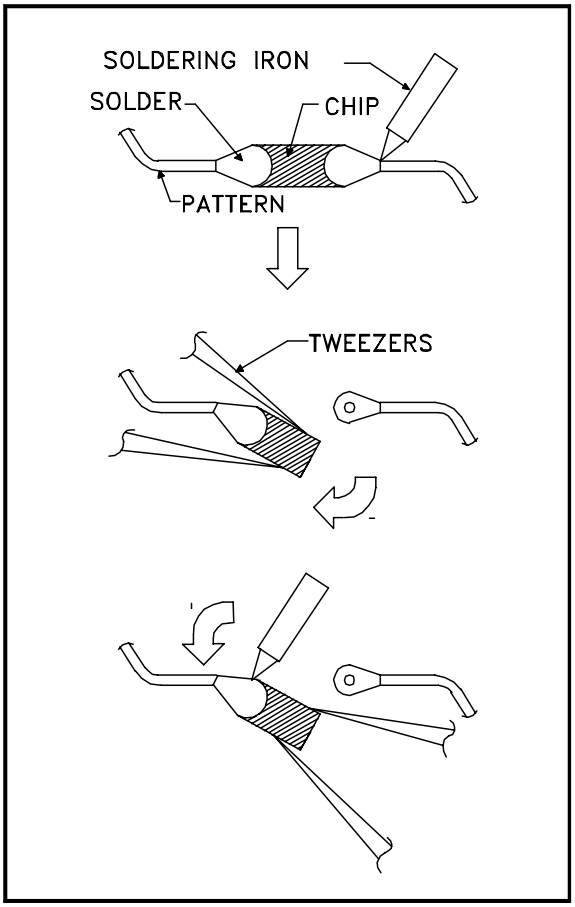

Chip Parts Removal (Transistors)

1. Melt the solder of one lead and lift the side of that lead upward.
2. Simultaneously melt the solder of the other two leads and lift the part from the PCB.

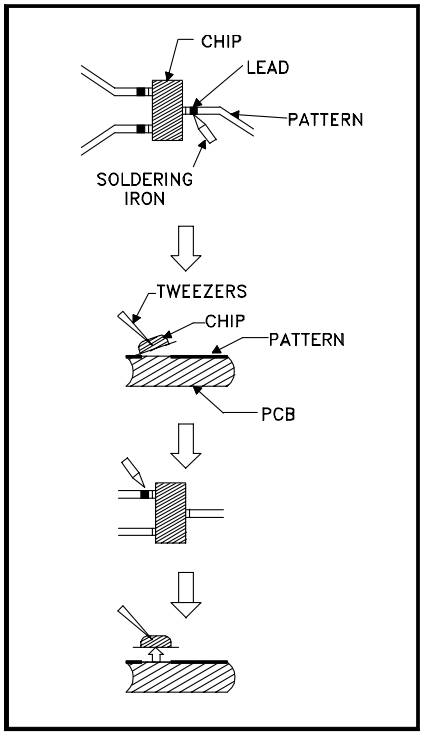

Replacement

1. Presolder the contact points on the circuit pattern.
2. Press the part downward with tweezers and apply the soldering iron as shown.

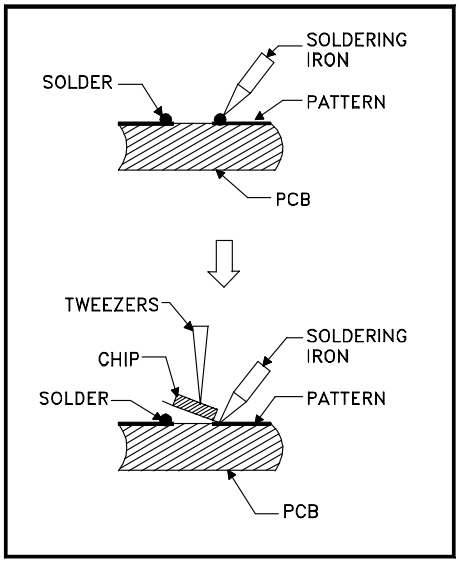

REPLACEMENT PARTS

Parts Ordering
To expedite delivery of replacement parts orders, specify the following:
1. Model Number/Serial Number
2. Part Number and description
3. Quantity

Note: Unless complete information is supplied, delay in processing of orders will result.

Critical and Warranty Parts Designation

Critical Electrical Components are indicated by **Bold Type** in the Parts List, and in the schematic diagrams by shading.

Warranty Return Parts are indicated in the Parts List with an **(*)**.

Parts Tolerance Codes
Refer to the following chart for tolerance characteristics of electrical components.

MARK	B	C	D	F	G	J	K
Tolerance %	± 0.1	± 0.25	± 0.5	± 1	± 2	± 5	± 10

MARK	M	N	V	X	Z	P	Q
Tolerance %	± 20	± 30	± 10	+ 40 -20	+ 80 -20	+ 100 - 0	+ 30 -10

MARK	M	N	V	X	Z
Tolerance (pF)	± 0.1	± 0.25	± 0.5	± 1	± 2

QUICK REFERENCE FOR COMMON REPLACEMENT PARTS

CRT ASSEMBLIES

MODEL	ASSY-CRT-RED	ASSY-CRT-RED	ASSY-CRT-RED
WS-48511	251C222010	251C222020	251C222030
WS-B55	251C221070	251C221080	251C221090
WS-55511	251C219040	251C219050	251C219060
WS-55711	251C219070	251C219080	251C219090
WS-65511	251C220010	251C220020	251C220030
WS-65611	251C220040	251C220050	251C220060
WS-65711	251C220070	251C220080	251C220090
WS-65712	251C221010	251C221020	251C221030
WS-73711	251C221040	251C221050	251C221060

REMOTE CONTROL

	290P109010	REMOTE CONTROL

HIGH VOLTAGE / DEFLECTION COMPONENTS

Q5A31	**261P071010**	**HORIZ-OUT 2SC5418 RL**	
Q5A51	**261P082010**	**HV-OUT 2SK2771-O1R**	
T5A51	**334P278010**	**TRANS-FLYBACK**	
	920P016010	**HV-BLOCK**	
	129P059050	VR-FOCUS	
	338P054010	SVM COIL	WS-B55 / WS-48511 / WS-55511 / WS-65511
	338P054020	SVM COIL	WS-55711 / WS-65611 / WS-65711 / WS-65712/ WS-73711
	330P276050	**DEFL-YOKE**	
	453B035010	**CAP-ANODE-SHORT-RED**	**All but WS-73711**
	453B035020	**CAP ANODE-LONG-G&B**	**All but WS-73711**
	453B035030	**CAP-ANODE-SHORT-RED**	**WS-73711 only**
	453B035040	**CAP ANODE-LONG-G&B**	**WS-73711 only**

MISCELLANEOUS

MODEL	MIRROR	LENTICULAR SCREEN	FRESNEL LENS
WS-48511	767D072040	491P138010	491P139010
WS-B55	767D072030	491P103030	491P104030
WS-55511	"	"	"
WS-55711	767D055040	"	"
WS-65511	767D048090	491P105030	491P106050
WS-65611	"	"	"
WS-65711	"	"	"
WS-65712	"	491P105040	491P106060
WS-73711	767C031010	491P085030	491P086030

[#] Model Legend:

(1) WS-B55, (2) WS-48511, (3) WS-55511, (4) WS-55711, (5) WS-65511, (6) WS-65611, (7) WS-65711, (8) WS-65712, (9) WS-73711

Ref #	Part #	Part Name & Description	[#]
		TUBES	
	251C219040	**ASSY-CRT-RED**	**3**
	251C219050	**ASSY-CRT-GREEN**	**3**
	251C219060	**ASSY-CRT-BLUE**	**3**
	251C219070	**ASSY-CRT-RED**	**4**
	251C219080	**ASSY-CRT-GREEN**	**4**
	251C219090	**ASSY-CRT-BLUE**	**4**
	251C220010	**ASSY-CRT-RED**	**5**
	251C220020	**ASSY-CRT-GREEN**	**5**
	251C220030	**ASSY-CRT-BLUE**	**5**
	251C220040	**ASSY-CRT-RED**	**6**
	251C220050	**ASSY-CRT-GREEN**	**6**
	251C220060	**ASSY-CRT-BLUE**	**6**
	251C220070	**ASSY-CRT-RED**	**7**
	251C220080	**ASSY-CRT-GREEN**	**7**
	251C220090	**ASSY-CRT-BLUE**	**7**
	251C221010	**ASSY-CRT-RED**	**8**
	251C221020	**ASSY-CRT-GREEN**	**8**
	251C221030	**ASSY-CRT-BLUE**	**8**
	251C221040	**ASSY-CRT-RED**	**9**
	251C221050	**ASSY-CRT-GREEN**	**9**
	251C221060	**ASSY-CRT-BLUE**	**9**
	251C221070	**ASSY-CRT-RED**	**1**
	251C221080	**ASSY-CRT-GREEN**	**1**
	251C221090	**ASSY-CRT-BLUE**	**1**
	251C222010	**ASSY-CRT-RED**	**2**
	251C222020	**ASSY-CRT-GREEN**	**2**
	251C222030	**ASSY-CRT-BLUE**	**2**
		INTEGRATED CIRCUITS	
IC10	270P806030	IC - SI-3018LSA	
IC20	270P877010	IC - UPC3217GV	
IC2A00	270P870010	IC - CXA2151Q	
IC2A60	272P938010	IC - M52055FP	
IC2B00	270P870010	IC - CXA2151Q	
IC2C00	275P496010	IC-C-MOS - UPD64082GF-3BA	
IC2C01	275P531010	IC-C-MOS - MSM54V16258B-45TS-K	
IC2D01	272P379020	IC - LM1881MX (NSC)	
IC2E00	270P658030	IC - CXA2019AQ/T4	
IC2F50	272P379020	IC - LM1881MX (NSC)	
IC2F60	272P379020	IC - LM1881MX (NSC)	
IC2F70	275P718010	IC-C-MOS - TC74HC4053FT	
IC2F80	275P718010	IC-C-MOS - TC74HC4053FT	
IC2H00	270P658030	IC - CXA2019AQ/T4	
IC2K00	270P623010	IC - CXA2069Q	
IC2L00	270P623010	IC - CXA2069Q	
IC2V00	270P663020	IC - CXA2101AQ	
IC2V90	275P419010	IC-C-MOS - SN74AHCT1G126DBV	
IC2Y01	270P526020	IC - MM1111XF	
IC3A01	270P467010	IC - TDA9855	
IC3E01	**270P750010**	**IC - LA4663**	
IC40	270P878010	IC - UPC1663G	
IC4A01	270P664010	IC - CXA2102Q	
IC4A02	270P575030	IC - NJM78M09DLA-TE1	1
IC4A02	270P950010	IC - NJM78M09DL1A(TE1)	
IC4A03	263P384010	IC-C-MOS - TC74HC221AF-EL	
IC4B01	**270P261020**	**IC - TDA8177**	
IC5100	275P686010	IC-C-MOS - TSB41AB3PFP	
IC5101	275P624010	IC-C-MOS - TSB42AA4	

Ref #	Part #	Part Name & Description	[#]
IC5102	274P670010	IC - 24LC04BT*SN	
IC5103	275P679010	IC-C-MOS - TC74LCX74FT	
IC5200	275P556020	IC-C-MOS - TC74LCX08FT	
IC5290	270P677030	IC - BAO9FP	
IC5300	275P684010	IC-C-MOS - TL810B	
IC5300	669D544020	SCREW-SEMS-W - M3X0.5-12	
IC5301	**275P672010**	**IC-C-MOS - RM5231-200Q**	
IC5302	275P675010	IC-C-MOS - SN74LV125APWR	
IC5303	275P666010	IC-C-MOS - MAX6358SYUT-T	
IC53A0	275P741020	IC-C-MOS - MT48LC8M16A2TG-75	
IC53A1	275P741020	IC-C-MOS - MT48LC8M16A2TG-75	
IC53A2	275P741020	IC-C-MOS - MT48LC8M16A2TG-75	
IC53A3	275P741020	IC-C-MOS - MT48LC8M16A2TG-75	
IC5400	275P677010	IC-C-MOS - SN74LVC573APWR	
IC5401	275P670020	IC-C-MOS - MT28F400B3WG-9T	
IC5403	275P864010	IC-C-MOS - MD2211-D16-V3	
IC5407	275P124040	IC-C-MOS - SN74LVC245APWR	
IC5408	275P665010	IC-C-MOS - M66230FP	
IC5409	275P421010	IC-C-MOS - SN74AHCT00D	
IC5410	275P122020	IC-C-MOS - SN74LV32APWR	
IC5411	275P674010	IC-C-MOS - SN74LV123APWR	
IC5412	275P664010	IC-C-MOS - IDTQS34XVH245Q3	
IC54A0	275P726010	IC-C-MOS - PIC17C43T-25/L	
IC54K1	275P673010	IC-C-MOS - RTC-8563SA	
IC54K5	275P270010	IC-C-MOS - M66010GP	
IC54Z1	275P657040	IC-C-MOS - AT24C256N-10SC/SI-2.7	1
IC54Z1	275P657050	IC-C-MOS - 24LC256T-I/SN	
IC54Z3	275P657040	IC-C-MOS - AT24C256N-10SC/SI-2.7	1
IC54Z3	275P657050	IC-C-MOS - 24LC256T-I/SN	
IC54Z4	270P880010	IC - 24LC64I/SN	
IC5500	275P903010	IC-C-MOS - VPC3230-QA-C5	
IC55A0	275P685040	IC-C-MOS - TL850D	
IC55A0	669D544020	SCREW-SEMS-W - M3X0.5-12	
IC55A2	275P669010	IC-C-MOS - MK2771-15	
IC55A3	275P689010	IC-C-MOS - ICS551MT	
IC55A4	275P689010	IC-C-MOS - ICS551MT	
IC55A5	275P680010	IC-C-MOS - TC74VCX257FT	
IC55A6	275P741020	IC-C-MOS - MT48LC8M16A2TG-75	
IC55A7	275P741020	IC-C-MOS - MT48LC8M16A2TG-75	
IC55A8	275P741020	IC-C-MOS - MT48LC8M16A2TG-75	
IC55A9	275P741020	IC-C-MOS - MT48LC8M16A2TG-75	
IC55C0	275P221020	IC-C-MOS - SN74LVC04APW	
IC55C2	275P668010	IC-C-MOS - MK2716STR	
IC55C3	275P680010	IC-C-MOS - TC74VCX257FT	
IC55C4	275P680010	IC-C-MOS - TC74VCX257FT	
IC55C5	275P683010	IC-C-MOS - TC74VCX16374FT	
IC55C6	275P683010	IC-C-MOS - TC74VCX16374FT	
IC55C8	275P682010	IC-C-MOS - TC74VCX16244FT	
IC55C9	275P682010	IC-C-MOS - TC74VCX16244FT	
IC55E0	279P069030	IC - SN74LVTH244APW	
IC55E1	275P464010	IC-C-MOS - TC7WH14FK	
IC55E2	275P388010	IC-C-MOS - ICS1523M	
IC55E3	275P679010	IC-C-MOS - TC74LCX74FT	
IC55F0	267P158010	HIC - AF-9317B	
IC5600	275P379020	IC-C-MOS - SN74LVC00APW	
IC5601	275P659010	IC-C-MOS - CS8414-CSR	
IC5602	279P069030	IC - SN74LVTH244APW	
IC5603	275P661040	IC-C-MOS - CS493002-CLR	
IC5604	275P678010	IC-C-MOS - SN74LVTH16374DGG	
IC5605	274D104020	IC-C-MOS - AUDIO_ROM_FOR_DM	

[#] Model Legend:
(1) WS-B55, (2) WS-48511, (3) WS-55511, (4) WS-55711, (5) WS-65511, (6) WS-65611, (7) WS-65711, (8) WS-65712, (9) WS-73711

Ref #	Part #	Part Name & Description	[#]
IC5606	275P464010	IC-C-MOS - TC7WH14FK	
IC5607	275P660010	IC-C-MOS - CS4341-KSR	
IC5670	270P938010	IC - MC33202D	
IC56A0	275P169030	IC-C-MOS - M65677FP	
IC56C0	275P663090	IC-C-MOS - M4A3-32/32-10VC	
IC5900	270P953010	IC - MIC39300-2.5BU	
IC59P0	270P879010	IC - SC1566IM-2.5	
IC5A00	**267P143020**	**KIC - MSPAD101**	
IC5A01	272P237010	IC - LA6324N	
IC5A02	266P154010	IC - UPC393C	
IC5A03	**270P704010**	**IC - LM4040BIZ-10.0**	
IC5A05	270P816010	IC - NJM431L	
IC5F00	263P479010	IC-C-MOS - TC74HC123AF	
IC60	275P715010	IC-C-MOS - BCM3510KPF	1
IC60	275P715020	IC-C-MOS - BCM3510KPF P22	
IC6B01	**270P667010**	**IC - TDA6120Q**	
IC6G01	**270P667010**	**IC - TDA6120Q**	
IC6R01	**270P667010**	**IC - TDA6120Q**	
IC70	275P662010	IC-C-MOS - CY7C1019BV33-15V	
IC7A00	**275P770040**	**IC-C-MOS - M306VOME-178FP**	
IC7A01	275P533010	IC-C-MOS - M24C64WM6T	
IC7A02	270P706010	IC - MAX823	
IC7A03	270P873010	IC - SN74CBT1G125DBVR	
IC7A04	270P873010	IC - SN74CBT1G125DBVR	
IC7B00	274P901010	IC-C-MOS - TC74HCT7007AF-EL	
IC7B80	263P154010	IC-C-MOS - SN74HC132DB	
IC7C30	275P419010	IC-C-MOS - SN74AHCT1G126DBV	
IC7D00	275P451010	IC-C-MOS - TC74HC4066AFN-ELP	
IC7D01	275P560010	IC - ADS931E A2D CONVERTER	
IC7D02	275P560010	IC - ADS931E A2D CONVERTER	
IC7D03	275P560010	IC - ADS931E A2D CONVERTER	
IC7D10	275P535010	IC-C-MOS - TC74AC157FN-ELP	
IC7D11	275P535010	IC-C-MOS - TC74AC157FN-ELP	
IC7E00	275P451010	IC-C-MOS - TC74HC4066AFN-ELP	
IC7E01	275P560010	IC - ADS931E A2D CONVERTER	
IC7E02	275P560010	IC - ADS931E A2D CONVERTER	
IC7E03	275P560010	IC - ADS931E A2D CONVERTER	
IC7E10	275P535010	IC-C-MOS - TC74AC157FN-ELP	
IC7E11	275P535010	IC-C-MOS - TC74AC157FN-ELP	
IC7G01	275P247010	IC-C-MOS - MB40C958VPFV	
IC7G04	275P534010	IC-C-MOS - TC74HCT574AFW-ELP	
IC7G05	275P534010	IC-C-MOS - TC74HCT574AFW-ELP	
IC7H00	275P714010	IC-C-MOS - NT56V1616A0T-7	
IC7H01	275P714010	IC-C-MOS - NT56V1616A0T-7	
IC7H02	275P436030	IC-C-MOS - TMC57127PPM	
IC7H03	275P439030	IC-C-MOS - MSM534031E-*TS-K	
IC7H04	270P506010	IC - M51957BFP	
IC7H05	263P384010	IC-C-MOS - TC74HC221AF-EL	
IC7H06	270P348010	IC - TLC2932IPW	
IC7H07	275P437020	IC - SLA4028	
IC7H08	270P348010	IC - TLC2932IPW	
IC7H09	274P901010	IC-C-MOS - TC74HCT7007AF-EL	
IC7H11	275P535010	IC-C-MOS - TC74AC157FN-ELP	
IC7H12	275P535010	IC-C-MOS - TC74AC157FN-ELP	
IC7H13	275P535010	IC-C-MOS - TC74AC157FN-ELP	
IC7H14	275P535010	IC-C-MOS - TC74AC157FN-ELP	
IC7K21	270P831010	IC-C-MOS - OPA2350PA	
IC7V01	275P362010	IC-C-MOS - Z86130	
IC80	266P419040	IC - M5223AFP	
IC800	275P595010	IC-C-MOS - CM0022AF	

Ref #	Part #	Part Name & Description	[#]
IC801	275P615010	IC-C-MOS - AT24C32N-10SI	
IC802	270P751010	IC - TL084CD	
IC803	270P751010	IC - TL084CD	
IC804	270P751010	IC - TL084CD	
IC8C01	**267P155010**	**HIC - STK393-110**	
IC8E01	270P817010	IC - L4931CDT33-TR	
IC8E02	272P603010	IC - LM78L05ACZ/NJM78L05A	
IC8E03	275P721010	IC-C-MOS - CD0031AM	
IC9A20	**267P159010**	**HIC - STR-G6623**	
IC9A21	**270P816010**	**IC - NJM431L**	
IC9A22	**267P076030**	**HIC - SI-3050C**	
IC9A50	**267P140020**	**HIC - STR-F6628**	
IC9A51	**267P062050**	**HIC - SE110N**	
IC9B00	270P872010	IC - HIP6006CB	
IC9C00	270P472060	IC - NJM7805FA	
IC9C01	270P210010	IC - NJM7809FA/AN7809F	
IC9C02	270P210010	IC - NJM7809FA/AN7809F	
IC9C03	270P950010	IC - NJM78M09DL1A(TE1)	
IC9C20	267P131010	HIC - SI-3033C	
IC9C40	267P076030	HIC - SI-3050C	
IC9C50	270P817010	IC - L4931CDT33-TR	

TRANSISTORS

TR-CHIP Type (Listed by Generic Number)

Part No.	Description
260P806010	DTA124EK/UN2112
260P807030	DTC124EKAT146
260P817010	2SA1037K-Q
260P817020	2SA1037K-R
260P817030	2SA1037K-S
260P818010	2SC2412K-Q
260P818030	2SC2412K-S
260P835030	2SC2413K-Q
260P836090	2SC3326-A,B
260P846030	DTC143ZKAT146
261P119010	2SC3583
261P801010	2SA1252-5,6

Conventional Transistors (By Ref #)

Ref #	Part No.	Description
Q4B01	260P559030	TR - 2SC1740S-S
Q54A2	261P114010	TR - 2SA1585STPR
Q5A01	**260P788020**	**TR - 2SC4690-O,R**
Q5A02	260P561020	TR - 2SA1371-E
Q5A03	260P386010	TR - 2SC2230-GR
Q5A04	260P559030	TR - 2SC1740S-S
Q5A05	260P560040	TR - 2SA933S-S
Q5A06	260P560040	TR - 2SA933S-S
Q5A07	261P123010	TRANSISTOR - UNR4113-S
Q5A08	260P325030	TR - 2SC2655-Y
Q5A10	260P603010	TR - DTA124ES/UN4112
Q5A31	**261P071010**	**TR - 2SC5418 RL**
Q5A32	260P587040	TR - 2SC2333-M,L
Q5A33	260P559030	TR - 2SC1740S-S
Q5A34	260P561020	TR - 2SA1371-E
Q5A35	260P386010	TR - 2SC2230-GR
Q5A36	**260P630010**	**TR - 2SD2012**
Q5A37	260P559030	TR - 2SC1740S-S
Q5A38	260P559030	TR - 2SC1740S-S

[#] Model Legend:

(1) WS-B55, (2) WS-48511, (3) WS-55511, (4) WS-55711, (5) WS-65511, (6) WS-65611, (7) WS-65711, (8) WS-65712, (9) WS-73711

Ref #	Part #	Part Name & Description	[#]
Q5A51	**261P082010**	**TR - 2SK2771-01R**	
Q5H05	260P559050	TR - 2SC1740S-E	
Q5H06	260P560040	TR - 2SA933S-S	
Q5H08	260P559050	TR - 2SC1740S-E	
Q5H09	260P559050	TR - 2SC1740S-E	
Q5H10	260P560040	TR - 2SA933S-S	
Q5H11	260P644040	TR - 2SA1535-R	
Q5H12	260P647040	TR - 2SC3944-R	
Q5K00	260P664030	TR - 2SC4636	
Q5K01	260P664030	TR - 2SC4636	
Q5K02	260P559050	TR - 2SC1740S-E	
Q5K03	260P560040	TR - 2SA933S-S	
Q6B01	260P560040	TR - 2SA933S-S	
Q6B02	260P560040	TR - 2SA933S-S	
Q6G01	260P560040	TR - 2SA933S-S	
Q6R01	260P560040	TR - 2SA933S-S	
Q7C31	261P114010	TR - 2SA1585STPR	
Q7K21	260P559030	TR - 2SC1740S-S	
Q9A20	261P101010	TR - PHP21N06T	
Q9A21	260P559030	TR - 2SC1740S-S	
Q9A22	260P559030	TR - 2SC1740S-S	
Q9A50	260P416030	TR - 2SC2274-F,K-F	
Q9A51	260P559030	TR - 2SC1740S-S	
Q9A53	260P559030	TR - 2SC1740S-S	
Q9A54	260P559030	TR - 2SC1740S-S	
Q9B00	261P136010	TRANSISTOR - FDS6680A	
Q9B01	261P136010	TRANSISTOR - FDS6680A	
Q9B02	261P133010	TR - FDS6612A	
		DIODES	
D2J04	264P485060	DIODE - RD7.5FB2	
D2J05	264P485060	DIODE - RD7.5FB2	
D2J91	264P485060	DIODE - RD7.5FB2	
D2M22	264P822010	D-CHIP - HSM2838	
D2V44	264P828010	D-CHIP - DAN202U/MA142WK	
D2W01	264P828010	D-CHIP - DAN202U/MA142WK	
D2W02	264P828010	D-CHIP - DAN202U/MA142WK	
D2W05	264P828010	D-CHIP - DAN202U/MA142WK	
D2W06	264P828010	D-CHIP - DAN202U/MA142WK	
D4B01	264D056020	DIODE - S5500D/EM1Z/ERB12-02RK	
D4B04	264P045040	DIODE - 1S24710M	
D54K0	264P808010	DIODE-CHIP - DAN202K	
D5A01	264P045040	DIODE - 1S24710M	
D5A02	264D056020	DIODE - S5500D/EM1Z/ERB12-02RK	
D5A12	264P045040	DIODE - 1S24710M	
D5A13	264P483070	DIODE - RD5.1FB1	
D5A14	264P045040	DIODE - 1S24710M	
D5A31	262P032010	DIODE - FMV-G2GS	
D5A33	264P669030	DIODE - S3L20U	
D5A34	264P483070	DIODE - RD5.1FB1	
D5A35	264P045040	DIODE - 1S24710M	
D5A36	264P045040	DIODE - 1S24710M	
D5A37	264P521040	DIODE - EU1A	
D5A51	262P039010	DIODE - BYW96E/20	
D5A52	264P899010	DIODE - BYV26E	
D5A53	264P489010	DIODE - RD16FB1	
D5A54	264P724010	DIODE - STF14	
D5A55	264P724010	DIODE - STF14	
D5A56	264P045040	DIODE - 1S24710M	
D5A57	264P521040	DIODE - EU1A	

Ref #	Part #	Part Name & Description	[#]
D5A58	264P045040	DIODE - 1S24710M	
D5A59	264P045040	DIODE - 1S24710M	
D5A60	264P489010	DIODE - RD16FB1	
D5F00	264P828010	D-CHIP - DAN202U/MA142WK	
D5F01	264P828010	D-CHIP - DAN202U/MA142WK	
D5F02	264P828010	D-CHIP - DAN202U/MA142WK	
D5H01	264P045040	DIODE - 1S24710M	
D5H02	264P045040	DIODE - 1S24710M	
D5H03	264P045040	DIODE - 1S24710M	
D5H04	264P045040	DIODE - 1S24710M	
D5K01	264P528030	DIODE - RP1H	
D5K02	264P543010	DIODE - EG01	
D5K03	264P543010	DIODE - EG01	
D5K10	264P528030	DIODE - RP1H	
D5K11	264P528030	DIODE - RP1H	
D6B01	262P063010	DIODE - 1SS244	
D6B02	264P501080	DIODE - HZ4BLL	
D6B07	262P063010	DIODE - 1SS244	
D6B08	262P063010	DIODE - 1SS244	
D6G01	262P063010	DIODE - 1SS244	
D6G03	264P457080	DIODE - RD3.3EB1	
D6G07	262P063010	DIODE - 1SS244	
D6G08	262P063010	DIODE - 1SS244	
D6R01	262P063010	DIODE - 1SS244	
D6R05	264P045040	DIODE - 1S24710M	
D6R06	264P045040	DIODE - 1S24710M	
D6R07	262P063010	DIODE - 1SS244	
D6R08	262P063010	DIODE - 1SS244	
D7H01	264P828010	D-CHIP - DAN202U/MA142WK	
D7K21	268P100010	PHOTO DIODE - SFH235FA	
D7K22	264P045040	DIODE - 1S24710M	
D7L20	264P485060	DIODE - RD7.5FB2	
D7L21	264P212020	D-LED - LN31GPH	
D8C01	264P045040	DIODE - 1S24710M	
D8C02	264P045040	DIODE - 1S24710M	
D8G00	264P486060	DIODE - RD9.1FB3	
D8G01	264P486060	DIODE - RD9.1FB3	
D9A01	**262P031010**	**DIODE - D6SB80**	
D9A20	**264P358040**	**DIODE - RU 4A**	
D9A21	264P899010	DIODE - BYV26E	
D9A22	264P045040	DIODE - 1S24710M	
D9A23	264P045040	DIODE - 1S24710M	
D9A24	264P045040	DIODE - 1S24710M	
D9A25	264P045040	DIODE - 1S24710M	
D9A26	264P045040	DIODE - 1S24710M	
D9A27	264P045040	DIODE - 1S24710M	
D9A28	264P045040	DIODE - 1S24710M	
D9A29	264P483070	DIODE - RD5.1FB1	
D9A31	264P045040	DIODE - 1S24710M	
D9A32	264P045040	DIODE - 1S24710M	
D9A33	**264P628010**	**DIODE - FMB-G14L**	
D9A34	264P470080	DIODE - EQA02-32C/RD33EB4	
D9A35	264P469090	DIODE - EQA02-28C/RD30EB2	
D9A50	264P045040	DIODE - 1S24710M	
D9A52	264P045040	DIODE - 1S24710M	
D9A53	264P045040	DIODE - 1S24710M	
D9A54	264P045040	DIODE - 1S24710M	
D9A55	264P045040	DIODE - 1S24710M	
D9A56	**264P566010**	**DIODE - FMP-G12S**	
D9A57	264P899010	DIODE - BYV26E	

[#] Model Legend:

(1) WS-B55, (2) WS-48511, (3) WS-55511, (4) WS-55711, (5) WS-65511, (6) WS-65611, (7) WS-65711, (8) WS-65712, (9) WS-73711

Ref #	Part #	Part Name & Description	[#]
D9A58	**264P588010**	**DIODE - FML-G16S**	
D9A60	264P669030	DIODE - S3L20U	
D9A61	264P669030	DIODE - S3L20U	
D9A64	264P045040	DIODE - 1S24710M	
D9A65	264P045040	DIODE - 1S24710M	
D9A66	264P045040	DIODE - 1S24710M	
D9B00	264P669030	DIODE - S3L20U	
D9B01	264P718010	DIODE - FR155	
D9B02	264P669030	DIODE - S3L20U	
D9B04	264P458050	DIODE - RD3.9EB1	
D9B05	264P484040	DIODE - RD5.6FB3	
D9C00	264D056020	DIODE - S5500D/EM1Z/ERB12-02RK	
		COILS	
L10	325C140050	COIL-CHIP - 2.2MH-M/K/J	
L14	325C140050	COIL-CHIP - 2.2MH-M/K/J	
L15	325C140050	COIL-CHIP - 2.2MH-M/K/J	
L16	325C140050	COIL-CHIP - 2.2MH-M/K/J	
L1A06	409P923060	EMI-F-CHIP - BLM21B272S	
L1A07	409P923060	EMI-F-CHIP - BLM21B272S	
L1A09	325C146030	COIL-CHIP - 10MH-J	
L1A13	409P923060	EMI-F-CHIP - BLM21B272S	
L1A50	325C146030	COIL-CHIP - 10MH-J	
L1A51	321C114010	COIL-RF - 2200MH-J	
L1B06	409P923060	EMI-F-CHIP - BLM21B272S	
L1B07	409P923060	EMI-F-CHIP - BLM21B272S	
L1B09	325C146030	COIL-CHIP - 10MH-J	
L1B13	409P923060	EMI-F-CHIP - BLM21B272S	
L1B50	325C146030	COIL-CHIP - 10MH-J	
L1B51	321C114010	COIL-RF - 2200MH-J	
L23	325C140050	COIL-CHIP - 2.2MH-M/K/J	
L2A00	325C241030	COIL-CHIP - 10MH-K	
L2A60	325C241030	COIL-CHIP - 10MH-K	
L2B00	325C241030	COIL-CHIP - 10MH-K	
L2C01	325C146050	COIL-CHIP - 15MH-J	
L2C03	409P777080	EMI-F-CHIP - BLM21P221S	
L2C05	409P777080	EMI-F-CHIP - BLM21P221S	
L2C06	409P777080	EMI-F-CHIP - BLM21P221S	
L2D01	325C146030	COIL-CHIP - 10MH-J	
L2D03	325C146030	COIL-CHIP - 10MH-J	
L2D08	409P777080	EMI-F-CHIP - BLM21P221S	
L2D20	325C146030	COIL-CHIP - 10MH-J	
L2E03	409P777080	EMI-F-CHIP - BLM21P221S	
L2E25	409P777080	EMI-F-CHIP - BLM21P221S	
L2F50	409P923060	EMI-F-CHIP - BLM21B272S	
L2F60	409P777080	EMI-F-CHIP - BLM21P221S	
L2F70	409P923060	EMI-F-CHIP - BLM21B272S	
L2F80	409P923060	EMI-F-CHIP - BLM21B272S	
L2H60	325C146030	COIL-CHIP - 10MH-J	
L2H61	325C146030	COIL-CHIP - 10MH-J	
L2J30	409P777050	EMI-F-CHIP - BLM21B201S	
L2J31	409P777050	EMI-F-CHIP - BLM21B201S	
L2J32	409P777050	EMI-F-CHIP - BLM21B201S	
L2J33	409P777050	EMI-F-CHIP - BLM21B201S	
L2J34	409P777050	EMI-F-CHIP - BLM21B201S	
L2J35	409P777050	EMI-F-CHIP - BLM21B201S	
L2K42	409P777080	EMI-F-CHIP - BLM21P221S	
L2L42	409P777080	EMI-F-CHIP - BLM21P221S	
L2M00	409P777080	EMI-F-CHIP - BLM21P221S	
L2M20	409P777080	EMI-F-CHIP - BLM21P221S	
L2V06	409P923060	EMI-F-CHIP - BLM21B272S	
L2V72	409P923060	EMI-F-CHIP - BLM21B272S	
L2V90	409P923060	EMI-F-CHIP - BLM21B272S	
L2V95	409P923060	EMI-F-CHIP - BLM21B272S	
L2W01	409P923060	EMI-F-CHIP - BLM21B272S	
L2W02	409P923060	EMI-F-CHIP - BLM21B272S	
L2W03	409P923060	EMI-F-CHIP - BLM21B272S	
L2W04	409P923060	EMI-F-CHIP - BLM21B272S	
L2W05	409P923060	EMI-F-CHIP - BLM21B272S	
L2X01	409P923060	EMI-F-CHIP - BLM21B272S	
L2X30	409P923060	EMI-F-CHIP - BLM21B272S	
L2Y00	409P923060	EMI-F-CHIP - BLM21B272S	
L2Y10	409P923060	EMI-F-CHIP - BLM21B272S	
L2Y30	409P923060	EMI-F-CHIP - BLM21B272S	
L3A37	409P923060	EMI-F-CHIP - BLM21B272S	
L40	325C140050	COIL-CHIP - 2.2MH-M/K/J	
L4A02	325C461030	COIL-PEAKING - 10MH-K	
L4A03	409P777080	EMI-F-CHIP - BLM21P221S	
L4B01	321C130010	COIL-RF - 2MH	
L4B02	321C130090	COIL-RF - 10MH-K	
L5105	351P216010	COIL-CH-CHIP - 857CM-0009	
L5115	351P216010	COIL-CH-CHIP - 857CM-0009	
L5125	351P216010	COIL-CH-CHIP - 857CM-0009	
L51G0	103P359050	R-M-CHIP - 1/8W 0OHM	
L51P2	409P865020	EMI-F-CHIP - BLM11A601S	
L51P3	409P777080	EMI-F-CHIP - BLM21P221S	
L51P4	409P777080	EMI-F-CHIP - BLM21P221S	
L5230	325C240050	COIL-CHIP - 2.2MH-M 322522	
L5233	325C142050	COIL-CHIP - 100MH-K/J	
L5250	325C140050	COIL-CHIP - 2.2MH-M/K/J	
L5251	325C140050	COIL-CHIP - 2.2MH-M/K/J	
L5252	325C140050	COIL-CHIP - 2.2MH-M/K/J	
L5253	325C140010	COIL-CHIP - 1MH-M 322522	
L5254	325C140010	COIL-CHIP - 1MH-M 322522	
L5290	325C140050	COIL-CHIP - 2.2MH-M/K/J	
L5291	325C140050	COIL-CHIP - 2.2MH-M/K/J	
L5292	325C140050	COIL-CHIP - 2.2MH-M/K/J	
L52F0	325C140050	COIL-CHIP - 2.2MH-M/K/J	
L52F1	325C140050	COIL-CHIP - 2.2MH-M/K/J	
L52F2	325C140050	COIL-CHIP - 2.2MH-M/K/J	
L52G0	325C140050	COIL-CHIP - 2.2MH-M/K/J	
L52G1	325C140050	COIL-CHIP - 2.2MH-M/K/J	
L52G2	325C140050	COIL-CHIP - 2.2MH-M/K/J	
L5300	325C141070	COIL-CHIP - 22MH-K/J	
L5301	409P777080	EMI-F-CHIP - BLM21P221S	
L5302	409P777080	EMI-F-CHIP - BLM21P221S	
L5400	409P945010	EMI-FILTER-CHIP - NFL21SP50	
L5401	409P945010	EMI-FILTER-CHIP - NFL21SP50	
L5402	409P945010	EMI-FILTER-CHIP - NFL21SP50	
L5403	409P945010	EMI-FILTER-CHIP - NFL21SP50	
L54A0	103P359050	R-M-CHIP - 1/8W 0OHM	
L54A1	409P876040	EMI-F-CHIP - CNF20C221S/CKD510JB1H221S	
L54A2	409P876040	EMI-F-CHIP - CNF20C221S/CKD510JB1H221S	
L54D0	409P945010	EMI-FILTER-CHIP - NFL21SP50	
L54D1	409P945010	EMI-FILTER-CHIP - NFL21SP50	
L54D2	409P945010	EMI-FILTER-CHIP - NFL21SP50	
L54D3	409P945010	EMI-FILTER-CHIP - NFL21SP50	
L5570	409P923060	EMI-F-CHIP - BLM21B272S	
L55A0	409P777080	EMI-F-CHIP - BLM21P221S	

[#] Model Legend:

(1) WS-B55, (2) WS-48511, (3) WS-55511, (4) WS-55711, (5) WS-65511, (6) WS-65611, (7) WS-65711, (8) WS-65712, (9) WS-73711

Ref #	Part #	Part Name & Description	[#]
L55A1	409P777080	EMI-F-CHIP - BLM21P221S	
L55A2	409P777080	EMI-F-CHIP - BLM21P221S	
L55A3	409P777080	EMI-F-CHIP - BLM21P221S	
L55A4	409P777080	EMI-F-CHIP - BLM21P221S	
L55C0	409P777080	EMI-F-CHIP - BLM21P221S	
L55E0	409P944010	EMI-FILTER-CHIP - NFL21SP10	
L55E1	409P944010	EMI-FILTER-CHIP - NFL21SP10	
L55E2	409P944010	EMI-FILTER-CHIP - NFL21SP10	
L55E3	409P945010	EMI-FILTER-CHIP - NFL21SP50	
L55E4	409P945010	EMI-FILTER-CHIP - NFL21SP50	
L55E5	409P945010	EMI-FILTER-CHIP - NFL21SP50	
L55E6	409P945010	EMI-FILTER-CHIP - NFL21SP50	
L55E7	409P945010	EMI-FILTER-CHIP - NFL21SP50	
L55F0	409P945010	EMI-FILTER-CHIP - NFL21SP50	
L55F1	409P945010	EMI-FILTER-CHIP - NFL21SP50	
L55F2	409P945010	EMI-FILTER-CHIP - NFL21SP50	
L55F3	409P945010	EMI-FILTER-CHIP - NFL21SP50	
L55F4	409P945010	EMI-FILTER-CHIP - NFL21SP50	
L55F5	409P945010	EMI-FILTER-CHIP - NFL21SP50	
L55F6	409P945010	EMI-FILTER-CHIP - NFL21SP50	
L55G7	409P923060	EMI-F-CHIP - BLM21B272S	
L55G8	409P923060	EMI-F-CHIP - BLM21B272S	
L55H2	409P923060	EMI-F-CHIP - BLM21B272S	
L55H4	409P923060	EMI-F-CHIP - BLM21B272S	
L55H5	409P923060	EMI-F-CHIP - BLM21B272S	
L5600	103P359050	R-M-CHIP - 1/8W 0OHM	
L5601	325C141030	COIL-CHIP - 10MH-K	
L5602	325C141030	COIL-CHIP - 10MH-K	
L56C0	325C141030	COIL-CHIP - 10MH-K	
L56D0	409P945010	EMI-FILTER-CHIP - NFL21SP50	
L56D1	409P945010	EMI-FILTER-CHIP - NFL21SP50	
L5900	409P809010	EMI-FILTER - BNX002-01	
L5901	325C241050	COIL-CHIP - 15MH-K	
L5903	103P359050	R-M-CHIP - 1/8W 0OHM	
L5906	325C241050	COIL-CHIP - 15MH-K	
L59A0	409P809010	EMI-FILTER - BNX002-01	
L59A1	409P777080	EMI-F-CHIP - BLM21P221S	
L59E0	411P012010	BEAD-FERRITE	
L59E1	409P777080	EMI-F-CHIP - BLM21P221S	
L59E2	409P777080	EMI-F-CHIP - BLM21P221S	
L59E3	409P777080	EMI-F-CHIP - BLM21P221S	
L59E4	409P777080	EMI-F-CHIP - BLM21P221S	
L59E5	409P777080	EMI-F-CHIP - BLM21P221S	
L59E6	409P777080	EMI-F-CHIP - BLM21P221S	
L59K0	325C241050	COIL-CHIP - 15MH-K	
L59K1	325C141030	COIL-CHIP - 10MH-K	
L59K2	103P359050	R-M-CHIP - 1/8W 0OHM	
L59L0	409P923060	EMI-F-CHIP - BLM21B272S	
L59M0	325C140050	COIL-CHIP - 2.2MH-M/K/J	
L59M1	325C141090	COIL-CHIP - 33MH-K	
L59N0	325C141090	COIL-CHIP - 33MH-K	
L59R0	325C141030	COIL-CHIP - 10MH-K	
L59R3	325C141030	COIL-CHIP - 10MH-K	
L59X0	325C140050	COIL-CHIP - 2.2MH-M/K/J	
L5A31	411P001010	LEAD-FERRITE	
L5A33	**333P052030**	**COIL-HORIZ-LIN**	
L5A34	321C130010	COIL-RF - 2MH	
L5A51	321C141030	COIL-RF - 10MH-K	
L5A52	321C141030	COIL-RF - 10MH-K	
L5A53	321C141010	COIL-RF - 6.8MH-M	

Ref #	Part #	Part Name & Description	[#]
L5A54	411D009020	CORE-FERRITE	
L5A55	411D009020	CORE-FERRITE	
L5F00	409P923060	EMI-F-CHIP - BLM21B272S	
L5H41	325C110090	COIL-PEAKING - 4.7MH-K	
L6B01	411P012010	BEAD-FERRITE	
L6B02	411P012010	BEAD-FERRITE	
L6G01	411P012010	BEAD-FERRITE	
L6G02	411P012010	BEAD-FERRITE	
L6R01	411P012010	BEAD-FERRITE	
L6R02	411P012010	BEAD-FERRITE	
L6R04	321C141010	COIL-RF - 6.8MH-M	
L7A30	409P923060	EMI-F-CHIP - BLM21B272S	
L7A99	409P923060	EMI-F-CHIP - BLM21B272S	
L7B00	409P923060	EMI-F-CHIP - BLM21B272S	
L7B76	409P923060	EMI-F-CHIP - BLM21B272S	
L7B80	409P923060	EMI-F-CHIP - BLM21B272S	
L7C00	325C146030	COIL-CHIP - 10MH-J	
L7C10	409P923060	EMI-F-CHIP - BLM21B272S	
L7C20	409P777050	EMI-F-CHIP - BLM21B201S	
L7C24	409P777050	EMI-F-CHIP - BLM21B201S	
L7C25	409P777050	EMI-F-CHIP - BLM21B201S	
L7D01	325C241030	COIL-CHIP - 10MH-K	
L7D11	325C242010	COIL-CHIP - 47MH-K	
L7D12	409P777020	EMI-F-CHIP - BLM21A05	
L7D13	325C241030	COIL-CHIP - 10MH-K	
L7D14	325C241030	COIL-CHIP - 10MH-K	
L7D15	325C241030	COIL-CHIP - 10MH-K	
L7E01	325C241030	COIL-CHIP - 10MH-K	
L7E11	325C242010	COIL-CHIP - 47MH-K	
L7E12	409P777020	EMI-F-CHIP - BLM21A05	
L7E13	325C241030	COIL-CHIP - 10MH-K	
L7E14	325C241030	COIL-CHIP - 10MH-K	
L7E15	325C241030	COIL-CHIP - 10MH-K	
L7G00	325C242050	COIL-CHIP - 100MH-K	
L7G10	325C242050	COIL-CHIP - 100MH-K	
L7G11	325C241030	COIL-CHIP - 10MH-K	
L7G12	325C241030	COIL-CHIP - 10MH-K	
L7H10	325C241030	COIL-CHIP - 10MH-K	
L7H11	409P777080	EMI-F-CHIP - BLM21P221S	
L7H12	325C241030	COIL-CHIP - 10MH-K	
L7H13	325C241030	COIL-CHIP - 10MH-K	
L7H14	325C241030	COIL-CHIP - 10MH-K	
L7H15	325C241030	COIL-CHIP - 10MH-K	
L7H16	325C241030	COIL-CHIP - 10MH-K	
L7H17	325C241030	COIL-CHIP - 10MH-K	
L7H19	409P777080	EMI-F-CHIP - BLM21P221S	
L7H20	325C241030	COIL-CHIP - 10MH-K	
L7H30	325C241030	COIL-CHIP - 10MH-K	
L7H31	325C241030	COIL-CHIP - 10MH-K	
L7H32	409P777080	EMI-F-CHIP - BLM21P221S	
L7H38	325C241030	COIL-CHIP - 10MH-K	
L7H40	325C241030	COIL-CHIP - 10MH-K	
L7H41	409P777080	EMI-F-CHIP - BLM21P221S	
L7H42	409P777080	EMI-F-CHIP - BLM21P221S	
L7H50	409P777080	EMI-F-CHIP - BLM21P221S	
L7H60	325C241030	COIL-CHIP - 10MH-K	
L7H70	325C241030	COIL-CHIP - 10MH-K	
L7H80	325C241030	COIL-CHIP - 10MH-K	
L7K01	325C121030	COIL-PEAKING - 10MH-K	
L7V01	409P923060	EMI-F-CHIP - BLM21B272S	

[#] Model Legend:
(1) WS-B55, (2) WS-48511, (3) WS-55511, (4) WS-55711, (5) WS-65511, (6) WS-65611, (7) WS-65711, (8) WS-65712, (9) WS-73711

Ref #	Part #	Part Name & Description	[#]
L80	325C140050	COIL-CHIP - 2.2MH-M/K/J	
L8C01	321C141070	COIL-RF - 22MH-K	
L8C02	321C141070	COIL-RF - 22MH-K	
L8D01	409P777080	EMI-F-CHIP - BLM21P221S	
L8D02	409P777080	EMI-F-CHIP - BLM21P221S	
L8D03	409P777080	EMI-F-CHIP - BLM21P221S	
L8D04	409P777080	EMI-F-CHIP - BLM21P221S	
L8D05	409P777080	EMI-F-CHIP - BLM21P221S	
L8D06	409P777080	EMI-F-CHIP - BLM21P221S	
L8D07	409P777080	EMI-F-CHIP - BLM21P221S	
L8G00	409P777080	EMI-F-CHIP - BLM21P221S	
L8G01	409P777080	EMI-F-CHIP - BLM21P221S	
L9A02	**351P223010**	**LINE FILTER - SLF15N0601**	
L9A20	411D009020	CORE-FERRITE	
L9A21	411D009020	CORE-FERRITE	
L9A22	321C141020	COIL-RF - 8.2MH	
L9A23	321C141020	COIL-RF - 8.2MH	
L9A24	321C141070	COIL-RF - 22MH-K	
L9A50	411D009020	CORE-FERRITE	
L9A51	411D009020	CORE-FERRITE	
L9A52	411D009020	CORE-FERRITE	
L9A53	321C141010	COIL-RF - 6.8MH-M	
L9A54	411D009020	CORE-FERRITE	
L9A55	321C142030	COIL-RF - 68MH-K	
L9A56	411D009020	CORE-FERRITE	
L9A57	321C141070	COIL-RF - 22MH-K	
L9A58	321C141070	COIL-RF - 22MH-K	
L9A59	321C141070	COIL-RF - 22MH-K	
L9A60	321C141070	COIL-RF - 22MH-K	
L9A62	321C141010	COIL-RF - 6.8MH-M	
L9A63	321C141010	COIL-RF - 6.8MH-M	
L9A64	321C130090	COIL-RF - 10MH-K	
L9A65	321C141010	COIL-RF - 6.8MH-M	
L9A66	321C141070	COIL-RF - 22MH-K	
L9A67	321C130090	COIL-RF - 10MH-K	
L9B01	321C140060	COIL-RF - 2.7MH-M 9X9.5	
L9B02	321C141070	COIL-RF - 22MH-K	
L9B03	321C140060	COIL-RF - 2.7MH-M 9X9.5	
L9B04	321C140060	COIL-RF - 2.7MH-M 9X9.5	
L9D00	**351P222010**	**LINE FILTER - ELF24V050A**	
L9D01	**351P222010**	**LINE FILTER - ELF24V050A**	
LC2J01	409P876060	EMI-F-CHIP - CNF20R102S/CKD510JB1H102S	
LC2J02	409P876060	EMI-F-CHIP - CNF20R102S/CKD510JB1H102S	
LC2J03	409P876060	EMI-F-CHIP - CNF20R102S/CKD510JB1H102S	
LC2J04	409P876060	EMI-F-CHIP - CNF20R102S/CKD510JB1H102S	
LC2J05	409P876060	EMI-F-CHIP - CNF20R102S/CKD510JB1H102S	
LC7D02	409P875090	EMI-F-CHIP - ELKE103FA	
LC7D05	409P875090	EMI-F-CHIP - ELKE103FA	
LC7D10	409P876020	EMI-F-CHIP - CNF20C470S/CKD510JB1H470S	
LC7D11	409P876020	EMI-F-CHIP - CNF20C470S/CKD510JB1H470S	
LC7D12	409P876020	EMI-F-CHIP - CNF20C470S/CKD510JB1H470S	
LC7D13	409P876020	EMI-F-CHIP - CNF20C470S/CKD510JB1H470S	
LC7D14	409P876020	EMI-F-CHIP - CNF20C470S/CKD510JB1H470S	
LC7E10	409P876020	EMI-F-CHIP - CNF20C470S/CKD510JB1H470S	
LC7E11	409P876020	EMI-F-CHIP - CNF20C470S/CKD510JB1H470S	
LC7E12	409P876020	EMI-F-CHIP - CNF20C470S/CKD510JB1H470S	
LC7E13	409P876020	EMI-F-CHIP - CNF20C470S/CKD510JB1H470S	
LC7E14	409P876020	EMI-F-CHIP - CNF20C470S/CKD510JB1H470S	
LC7G01	409P876020	EMI-F-CHIP - CNF20C470S/CKD510JB1H470S	
LC7G02	409P876020	EMI-F-CHIP - CNF20C470S/CKD510JB1H470S	
LC7G03	409P876020	EMI-F-CHIP - CNF20C470S/CKD510JB1H470S	
LC7G04	409P876020	EMI-F-CHIP - CNF20C470S/CKD510JB1H470S	
LC7G05	409P876020	EMI-F-CHIP - CNF20C470S/CKD510JB1H470S	
LC7G06	409P876020	EMI-F-CHIP - CNF20C470S/CKD510JB1H470S	
LC7G07	409P876020	EMI-F-CHIP - CNF20C470S/CKD510JB1H470S	
LC7G08	409P875090	EMI-F-CHIP - ELKE103FA	
LC7G09	409P875090	EMI-F-CHIP - ELKE103FA	
LC7G10	409P876020	EMI-F-CHIP - CNF20C470S/CKD510JB1H470S	
LC7G11	409P876020	EMI-F-CHIP - CNF20C470S/CKD510JB1H470S	
LC7G12	409P876020	EMI-F-CHIP - CNF20C470S/CKD510JB1H470S	
LC7G13	409P876020	EMI-F-CHIP - CNF20C470S/CKD510JB1H470S	
LC7G14	409P876020	EMI-F-CHIP - CNF20C470S/CKD510JB1H470S	
LC7G15	409P876020	EMI-F-CHIP - CNF20C470S/CKD510JB1H470S	
LC7J03	409P876020	EMI-F-CHIP - CNF20C470S/CKD510JB1H470S	
LC7J04	409P876020	EMI-F-CHIP - CNF20C470S/CKD510JB1H470S	
LC7J05	409P876020	EMI-F-CHIP - CNF20C470S/CKD510JB1H470S	
LC7J10	409P876020	EMI-F-CHIP - CNF20C470S/CKD510JB1H470S	
LC7J13	409P876020	EMI-F-CHIP - CNF20C470S/CKD510JB1H470S	
LC7J14	409P876020	EMI-F-CHIP - CNF20C470S/CKD510JB1H470S	
LC7J15	409P876020	EMI-F-CHIP - CNF20C470S/CKD510JB1H470S	
LF56A1	409P900010	LP-FILTER - 7MHZ SMD	
LF7D00	409P901010	LP-FILTER - 14MHZ SMD	
LF7D01	409P901010	LP-FILTER - 14MHZ SMD	
LF7D02	409P901010	LP-FILTER - 14MHZ SMD	
LF7E00	409P901010	LP-FILTER - 14MHZ SMD	
LF7E01	409P901010	LP-FILTER - 14MHZ SMD	
LF7E02	409P901010	LP-FILTER - 14MHZ SMD	
LF7G00	409P901010	LP-FILTER - 14MHZ SMD	
LF7G01	409P901010	LP-FILTER - 14MHZ SMD	
LF7G02	409P901010	LP-FILTER - 14MHZ SMD	

TRANSFORMERS

T5A31	**349P216010**	**TRANS-HORIZ**
T5A32	**336P040010**	**TRANS-HORIZ-DRIVE**
T5A51	**334P278010**	**TRANS-FLYBACK**
T9A20	**350P766020**	**TRANS-POWER**
T9A50	**350P800010**	**TRANS-POWER - ZTS7484**
T9B00	350P788010	TRANS-POWER

VARIABLE RESISTORS

	129P059050	VR-FOCUS - MHF116-50W
RV9D00	**265P100010**	**VARISTOR - ERZV10D271/ERZVEAV271**

RESISTORS

R-M-CHIP Type Resistors (Listed by Value)

Value	Part No.	Value	Part No.
1/16W 0OHM	103P509050	1/16W 2K-F	103P493020
1/8W 0OHM	103P409050	1/16W 2.2K-F	103P493030
1/4W 00HM	103P489050	1/16W 2.2K-J	103P502090
1/16W 6.8-J	103P509000	1/16W 2.4K-F	103P493040
1/16W 10-J	103P500010	1/16W 2.7K-J	103P503000
1/8W 10-J	103P400010	1/16W 3K-F	103P493060
1/16W 15-J	103P500030	1/16W 3.3K-F	103P493070
1/16W 22-J	103P500050	1/16W 3.3K-J	103P503010
1/8W 22-J	103P400050	1/16W 3.9K-F	103P493090
1/16W 33-J	103P500070	1/16W 3.9K-J	103P503020
1/16W 47-J	103P500090	1/16W 4.7K-F	103P494010
1/16W 56-D	103P844030	1/16W 4.7K-J	103P503030
1/16W 56-J	103P501000	1/16W 5.1K-F	103P494020

[#] Model Legend:

(1) WS-B55, (2) WS-48511, (3) WS-55511, (4) WS-55711, (5) WS-65511, (6) WS-65611, (7) WS-65711, (8) WS-65712, (9) WS-73711

Ref #	Part #	Part Name & Description	[#]

Value	Part No.	Value	Part No.
1/8W 56-J	103P401000	1/16W 5.6K-J	103P503040
1/4W 75-J	103P489090	1/16W 6.2K-D	103P814040
1/16W 100-J	103P501030	1/16W 6.2K-F	103P494040
1/16W 120-J	103P501040	1/16W 6.8K-F	103P494050
1/16W 150-D	103P810050	1/16W 6.8K-J	103P503050
1/16W 150-J	103P501050	1/16W 8.2K-F	103P494070
1/16W 160-F	103P490060	1/16W 8.2K-J	103P503060
1/16W 180-J	103P501060	1/16W 10K-F	103P494090
1/16W 220-J	103P501070	1/16W 10K-J	103P503070
1/16W 240-F	103P491000	1/16W 12K-J	103P503080
1/8W 270-F	103P471010	1/16W 13K-F	103P495020
1/16W 300-F	103P491020	1/16W 15K-J	103P503090
1/16W 330-F	103P491030	1/16W 16K-F	103P495040
1/16W 330-J	103P501090	1/16W 18K-J	103P504000
1/8W 330-J	103P401090	1/16W 22K-F	103P495070
1/16W 390-F	103P491050	1/16W 22K-J	103P504010
1/16W 390-J	103P502000	1/16W 24K-F	103P495080
1/16W 470-J	103P502010	1/16W 27K-F	103P495090
1/4W 470-J	103P482010	1/16W 27K-J	103P504020
1/16W 510-F	103P491080	1/16W 33K-J	103P504030
1/16W 560-F	103P491090	1/16W 39K-J	103P504040
1/16W 560-J	103P502020	1/16W 47K-F	103P496050
1/16W 620-F	103P492000	1/16W 47K-J	103P504050
1/16W 680-F	103P492010	1/8W 47K-J	103P404050
1/16W 680-J	103P502030	1/16W 56K-J	103P504060
1/16W 820-J	103P502040	1/16W 68K-J	103P504070
1/16W 1K-F	103P492050	1/16W 75K-J	103P509090
1/16W 1K-J	103P502050	1/16W 82K-J	103P504080
1/16W 1.2K-F	103P492070	1/16W 100K-F	103P497030
1/16W 1.2K-J	103P502060	1/16W 100K-J	103P504090
1/16W 1.3K-F	103P492080	1/16W 120K-J	103P505000
1/16W 1.5K-F	103P492090	1/16W 150K-J	103P505010
1/16W 1.5K-J	103P502070	1/16W 330K-J	103P505050
1/8W 1.5K-F	103P472090	1/16W 560K-J	103P505080
1/8W 1.5K-J	103P402070	1/16W 680K-J	103P505090
1/16W 1.6K-F	103P493000	1/16W 820K-J	103P506000
1/16W 1.8K-F 1	103P493010	1/16W 1M-J	103P506010
1/16W 1.8K-J	103P502080	1/16W 3.3M-J	103P506070

Conventional Resistors (By Ref #)

Ref #	Part #	Description	[#]
R2M01	103P711080	R-CARBON - 1/4W 270-J	
R2M06	103P711080	R-CARBON - 1/4W 270-J	
R2M10	103P711080	R-CARBON - 1/4W 270-J	
R3E02	103P712080	R-CARBON - 1/4W 1.8K-J	
R3E04	103P712080	R-CARBON - 1/4W 1.8K-J	
R3E05	103P714060	R-CARBON - 1/4W 56K-J	
R3E06	103P713070	R-CARBON - 1/4W 10K-J	
R3E15	103P713050	R-CARBON - 1/4W 6.8K-J	
R3E16	103P713050	R-CARBON - 1/4W 6.8K-J	
R4B02	103P463060	R-METAL - 1/4W 3K-F	2
R4B05	103P713090	R-CARBON - 1/4W 15K-J	
R4B10	103C188050	R-METAL - 2W 2.7-J	
R4B12	103C188040	R-METAL - 2W 2.2-J	
R4B17	103P712010	R-CARBON - 1/4W 470-J	
R4B20	103P711090	R-CARBON - 1/4W 330-J	
R4B22	103P712090	R-CARBON - 1/4W 2.2K-J	1345678
R4B23	103P711070	R-CARBON - 1/4W 220-J	
R4B24	103P712050	R-CARBON - 1/4W 1K-J	
R4B25	103P712050	R-CARBON - 1/4W 1K-J	
R4B26	103P713000	R-CARBON - 1/4W 2.7K-J	
R4B27	103P714080	R-CARBON - 1/4W 82K-J	
R4B28	103P464040	R-METAL - 1/4W 2.4K-F	
R5290	103C188040	R-METAL - 2W 2.2-J	
R54E4	103C180020	R-METAL - 2W 12-J	
R54E5	103C180020	R-METAL - 2W 12-J	
R5A01	103P712050	R-CARBON - 1/4W 1K-J	
R5A02	103P712090	R-CARBON - 1/4W 2.2K-J	
R5A03	103P713010	R-CARBON - 1/4W 3.3K-J	
R5A04	103P713090	R-CARBON - 1/4W 15K-J	
R5A05	103P713070	R-CARBON - 1/4W 10K-J	
R5A06	103P713070	R-CARBON - 1/4W 10K-J	
R5A07	103P714030	R-CARBON - 1/4W 33K-J	
R5A08	103C194010	R-METAL - 3W 22K-J	
R5A09	103P714040	R-CARBON - 1/4W 39K-J	
R5A10	103P714040	R-CARBON - 1/4W 39K-J	
R5A11	103P713070	R-CARBON - 1/4W 10K-J	
R5A12	103P712050	R-CARBON - 1/4W 1K-J	
R5A15	103P713010	R-CARBON - 1/4W 3.3K-J	
R5A16	103P713090	R-CARBON - 1/4W 15K-J	
R5A17	103P712050	R-CARBON - 1/4W 1K-J	
R5A18	103P711030	R-CARBON - 1/4W 100-J	
R5A19	103P461070	R-METAL - 1/4W 470-F	
R5A20	103P714050	R-CARBON - 1/4W 47K-J	
R5A21	103P713000	R-CARBON - 1/4W 2.7K-J	
R5A22	103P714010	R-CARBON - 1/4W 22K-J	
R5A23	103P713030	R-CARBON - 1/4W 4.7K-J	
R5A24	103P714070	R-CARBON - 1/4W 68K-J	
R5A25	103P712010	R-CARBON - 1/4W 470-J	
R5A26	103P712090	R-CARBON - 1/4W 2.2K-J	
R5A29	103P714010	R-CARBON - 1/4W 22K-J	
R5A30	103C181060	R-METAL - 2W 180-J	
R5A31	103P711030	R-CARBON - 1/4W 100-J	
R5A33	103P142010	R-CARBON - 1/2W 470-J	
R5A34	103P711010	R-CARBON - 1/4W 68-J	
R5A35	103P143020	R-CARBON - 1/2W 3.9K-J	
R5A36	103C393020	R-METAL-P - 3W 3.9K-J	
R5A37	103C393010	R-METAL-P - 3W 3.3K-J	
R5A38	103C397070	R-METAL-P - 3W 0.56-K	
R5A39	103C170050	R-METAL - 1W 22-J	
R5A40	103P714090	R-CARBON - 1/4W 100K-J	
R5A41	103P714040	R-CARBON - 1/4W 39K-J	
R5A42	103P713030	R-CARBON - 1/4W 4.7K-J	
R5A43	103P714010	R-CARBON - 1/4W 22K-J	
R5A45	103C393080	R-METAL-P - 3W 12K-J	
R5A46	103C391050	R-METAL-P - 3W 150-J	
R5A47	103P714030	R-CARBON - 1/4W 33K-J	
R5A49	103P713050	R-CARBON - 1/4W 6.8K-J	
R5A50	103P712090	R-CARBON - 1/4W 2.2K-J	
R5A51	**102P107000**	**R-WIRE - 2W 0.15-K**	
R5A52	103P712010	R-CARBON - 1/4W 470-J	
R5A53	103P711000	R-CARBON - 1/4W 56-J	
R5A54	103C190090	R-METAL - 3W 47-J	
R5A55	103P712050	R-CARBON - 1/4W 1K-J	
R5A56	103P715060	R-CARBON - 1/4W 390K-J	
R5A57	103P711030	R-CARBON - 1/4W 100-J	
R5A59	**103P461030**	**R-METAL - 1/4W 330-F**	
R5A60	**103P463010**	**R-METAL - 1/4W 1.8K-F**	
R5A61	103P713060	R-CARBON - 1/4W 8.2K-J	

[#] Model Legend:

(1) WS-B55, (2) WS-48511, (3) WS-55511, (4) WS-55711, (5) WS-65511, (6) WS-65611, (7) WS-65711, (8) WS-65712, (9) WS-73711

Ref #	Part #	Part Name & Description	[#]
R5A62	103P711030	R-CARBON - 1/4W 100-J	
R5A63	103P713090	R-CARBON - 1/4W 15K-J	
R5A64	103P714090	R-CARBON - 1/4W 100K-J	
R5A65	103P141030	R-CARBON - 1/2W 100-J	
R5A68	**103P463040**	**R-METAL - 1/4W 2.4K-F**	**9**
R5A68	**103P463080**	**R-METAL - 1/4W 2.4K-F**	**12345678**
R5A69	**103P460090**	**R-METAL - 1/4W 220-F**	
R5A70	**103P463040**	**R-METAL - 1/4W 2.4K-F**	**9**
R5A71	103P713070	R-CARBON - 1/4W 10K-J	
R5A72	**103P461070**	**R-METAL - 1/4W 470-F**	
R5A73	103P714080	R-CARBON - 1/4W 82K-J	
R5A74	103P713070	R-CARBON - 1/4W 10K-J	
R5A75	103P713070	R-CARBON - 1/4W 10K-J	
R5A76	103P713070	R-CARBON - 1/4W 10K-J	
R5A78	103P714010	R-CARBON - 1/4W 22K-J	
R5A81	103P711030	R-CARBON - 1/4W 100-J	
R5A82	**103P370090**	**R-FUSE - 1/4W 47-J**	
R5A83	**103P464070**	**R-METAL - 1/4W 8.2K-F**	
R5A84	**103P464070**	**R-METAL - 1/4W 8.2K-F**	
R5A85	103P711010	R-CARBON - 1/4W 68-J	
R5A86	103P142060	R-CARBON - 1/2W 1.2K-J	
R5A87	103P711030	R-CARBON - 1/4W 100-J	
R5A88	103P464000	R-METAL - 1/4W 4.3K-F	
R5A89	103P463050	R-METAL - 1/4W 2.7K-F	
R5A90	103P713030	R-CARBON - 1/4W 4.7K-J	
R5A91	103P714090	R-CARBON - 1/4W 100K-J	
R5A92	103P713070	R-CARBON - 1/4W 10K-J	
R5A96	103P713070	R-CARBON - 1/4W 10K-J	
R5A97	103P711030	R-CARBON - 1/4W 100-J	
R5A98	**103C197090**	**R-METAL - 3W 0.82-J**	**12345678**
R5A98	**103C198010**	**R-METAL - 3W 1.2-J**	**9**
R5A99	103P714020	R-CARBON - 1/4W 27K-J	
R5B01	103P712010	R-CARBON - 1/4W 470-J	
R5H02	103P750010	R-FUSE - 1/4W 10-J	
R5H03	103P715000	R-CARBON - 1/4W 120K-J	
R5H04	103P712010	R-CARBON - 1/4W 470-J	
R5H05	103P712060	R-CARBON - 1/4W 1.2K-J	
R5H06	103P712060	R-CARBON - 1/4W 1.2K-J	
R5H22	103P712010	R-CARBON - 1/4W 470-J	
R5H40	103P712020	R-CARBON - 1/4W 560-J	
R5H41	103P712060	R-CARBON - 1/4W 1.2K-J	
R5H42	103P711050	R-CARBON - 1/4W 150-J	
R5H47	103C170090	R-METAL - 1W 47-J	
R5H48	103P712060	R-CARBON - 1/4W 1.2K-J	
R5H49	103P714070	R-CARBON - 1/4W 68K-J	
R5H50	103P714070	R-CARBON - 1/4W 68K-J	
R5H51	103P712060	R-CARBON - 1/4W 1.2K-J	
R5H53	103P715000	R-CARBON - 1/4W 120K-J	
R5H55	103P141000	R-CARBON - 1/2W 56-J	
R5H56	103P141000	R-CARBON - 1/2W 56-J	
R5H59	103C181030	R-METAL - 2W 100-J	
R5H60	103C178080	R-METAL - 1W 4.7-J	
R5H84	103P713040	R-CARBON - 1/4W 5.6K-J	
R5K01	109D031070	R-COMPOSITION - 1/2W 10K-K	
R5K02	103P412050	R-CARBON - 1/4W 1K-J	
R5K03	103P145000	R-CARBON - 1/2W 120K-J	
R5K04	103P144090	R-CARBON - 1/2W 100K-J	
R5K05	103P145000	R-CARBON - 1/2W 120K-J	
R5K06	103P144090	R-CARBON - 1/2W 100K-J	
R5K07	103P145000	R-CARBON - 1/2W 120K-J	
R5K08	103P144090	R-CARBON - 1/2W 100K-J	
R5K09	103P762020	R-FUSE - 1/2W 560-J	
R5K10	103P711010	R-CARBON - 1/4W 68-J	
R5K12	**103P760060**	**R-FUSE - 1/2W 27-J**	
R5K13	103P145000	R-CARBON - 1/2W 120K-J	
R5K14	103P144090	R-CARBON - 1/2W 100K-J	
R5K15	103P145000	R-CARBON - 1/2W 120K-J	
R5K16	103P144090	R-CARBON - 1/2W 100K-J	
R5K17	103P145000	R-CARBON - 1/2W 120K-J	
R5K18	103P144090	R-CARBON - 1/2W 100K-J	
R5K19	103P464000	R-METAL - 1/4W 4.3K-F	
R5K20	103P712060	R-CARBON - 1/4W 1.2K-J	
R5K21	103P713070	R-CARBON - 1/4W 10K-J	
R5K22	103P145050	R-CARBON - 1/2W 330K-J	
R5K23	103P145050	R-CARBON - 1/2W 330K-J	
R5K24	103P145050	R-CARBON - 1/2W 330K-J	
R5K25	103P713040	R-CARBON - 1/4W 5.6K-J	
R5K31	103P711030	R-CARBON - 1/4W 100-J	
R5K34	**103P760060**	**R-FUSE - 1/2W 27-J**	
R5K46	103P712010	R-CARBON - 1/4W 470-J	
R5K50	103P762050	R-FUSE - 1/2W 1K-J	
R6B01	103P711030	R-CARBON - 1/4W 100-J	
R6B02	103P714010	R-CARBON - 1/4W 22K-J	
R6B03	103P714010	R-CARBON - 1/4W 22K-J	
R6B05	103P411060	R-CARBON - 1/4W 180-J	
R6B06	103P462070	R-METAL - 1/4W 1.2K-F	
R6B07	103P711030	R-CARBON - 1/4W 100-J	
R6B08	103P710010	R-CARBON - 1/4W 10-J	
R6B09	103P711030	R-CARBON - 1/4W 100-J	
R6B10	103P711030	R-CARBON - 1/4W 100-J	
R6B11	103C194010	R-METAL - 3W 22K-J	
R6B14	103P413050	R-CARBON - 1/4W 6.8K-J	
R6B15	103P711030	R-CARBON - 1/4W 100-J	
R6B16	103P411000	R-CARBON - 1/4W 56-J	
R6B17	101P221030	R-COMPOSITION - 1/2W 220-K	
R6B18	103P711030	R-CARBON - 1/4W 100-J	
R6B20	101P221030	R-COMPOSITION - 1/2W 220-K	
R6B21	103P712060	R-CARBON - 1/4W 1.2K-J	
R6B22	103P711030	R-CARBON - 1/4W 100-J	
R6B25	103P712030	R-CARBON - 1/4W 680-J	
R6G01	103P711030	R-CARBON - 1/4W 100-J	
R6G02	103P714010	R-CARBON - 1/4W 22K-J	
R6G03	103P714010	R-CARBON - 1/4W 22K-J	
R6G05	103P411010	R-CARBON - 1/4W 68-J	
R6G06	103P462030	R-METAL - 1/4W 820-F	
R6G07	103P711030	R-CARBON - 1/4W 100-J	
R6G08	103P710010	R-CARBON - 1/4W 10-J	
R6G09	103P711030	R-CARBON - 1/4W 100-J	
R6G10	103P711030	R-CARBON - 1/4W 100-J	
R6G11	103C194010	R-METAL - 3W 22K-J	
R6G16	103P411000	R-CARBON - 1/4W 56-J	
R6G17	101P221030	R-COMPOSITION - 1/2W 220-K	
R6G20	101P221030	R-COMPOSITION - 1/2W 220-K	
R6G21	103P712060	R-CARBON - 1/4W 1.2K-J	
R6G22	103P711030	R-CARBON - 1/4W 100-J	
R6R01	103P711030	R-CARBON - 1/4W 100-J	
R6R02	103P714010	R-CARBON - 1/4W 22K-J	
R6R03	103P714010	R-CARBON - 1/4W 22K-J	
R6R05	103P411060	R-CARBON - 1/4W 180-J	
R6R06	103P462050	R-METAL - 1/4W 1K-F	

[#] Model Legend:

(1) WS-B55, (2) WS-48511, (3) WS-55511, (4) WS-55711, (5) WS-65511, (6) WS-65611, (7) WS-65711, (8) WS-65712, (9) WS-73711

Ref #	Part #	Part Name & Description	[#]
R6R07	103P711030	R-CARBON - 1/4W 100-J	
R6R08	103P710010	R-CARBON - 1/4W 10-J	
R6R09	103P711030	R-CARBON - 1/4W 100-J	
R6R10	103P711030	R-CARBON - 1/4W 100-J	
R6R11	103C194010	R-METAL - 3W 22K-J	
R6R16	103P411000	R-CARBON - 1/4W 56-J	
R6R17	101P221030	R-COMPOSITION - 1/2W 220-K	
R6R20	101P221030	R-COMPOSITION - 1/2W 220-K	
R6R22	103P711030	R-CARBON - 1/4W 100-J	
R7C34	103C178010	R-METAL - 1W 1.2-J	
R7K01	103P712050	R-CARBON - 1/4W 1K-J	
R7K02	103P713010	R-CARBON - 1/4W 3.3K-J	
R7K21	103P711080	R-CARBON - 1/4W 270-J	
R7K22	103P715030	R-CARBON - 1/4W 220K-J	
R7K23	103P713080	R-CARBON - 1/4W 12K-J	
R7K24	103P713080	R-CARBON - 1/4W 12K-J	
R7K25	103P713080	R-CARBON - 1/4W 12K-J	
R7K26	103P715030	R-CARBON - 1/4W 220K-J	
R7K27	103P713070	R-CARBON - 1/4W 10K-J	
R7K28	103P711050	R-CARBON - 1/4W 150-J	
R7K29	103P712060	R-CARBON - 1/4W 1.2K-J	
R7K30	103P713070	R-CARBON - 1/4W 10K-J	
R7K31	103P715030	R-CARBON - 1/4W 220K-J	
R7K32	103P713030	R-CARBON - 1/4W 4.7K-J	
R7K34	103P713000	R-CARBON - 1/4W 2.7K-J	
R7K35	103P711030	R-CARBON - 1/4W 100-J	
R7K36	103P710090	R-CARBON - 1/4W 47-J	
R7L26	103P462090	R-METAL - 1/4W 1.5K-F	
R7L29	103P464030	R-METAL - 1/4W 5.6K-F	
R7L32	103P466070	R-METAL - 1/4W 56K-F	
R8C03	103P711090	R-CARBON - 1/4W 330-J	
R8C07	103C391050	R-METAL-P - 3W 150-J	
R8C11	103P711090	R-CARBON - 1/4W 330-J	
R8C15	103C391050	R-METAL-P - 3W 150-J	
R8C19	103P711090	R-CARBON - 1/4W 330-J	
R8C23	103C391050	R-METAL-P - 3W 150-J	
R8C27	103P711090	R-CARBON - 1/4W 330-J	
R8C31	103C391050	R-METAL-P - 3W 150-J	
R8C35	103P711090	R-CARBON - 1/4W 330-J	
R8C39	103C391050	R-METAL-P - 3W 150-J	
R8C43	103P711090	R-CARBON - 1/4W 330-J	
R8C47	103C391050	R-METAL-P - 3W 150-J	
R8C60	103C191090	R-METAL - 3W 330-J	
R8C61	103C191090	R-METAL - 3W 330-J	
R8C62	103P713010	R-CARBON - 1/4W 3.3K-J	
R8C63	103P713010	R-CARBON - 1/4W 3.3K-J	
R8C64	103P713010	R-CARBON - 1/4W 3.3K-J	
R8C65	103P713010	R-CARBON - 1/4W 3.3K-J	
R8C66	103P713010	R-CARBON - 1/4W 3.3K-J	
R8C67	103P713010	R-CARBON - 1/4W 3.3K-J	
R9A02	**102P338040**	**R-CEMENT-WIRE - 15W 2.2-K**	
R9A03	**109C010010**	**R-COMPOSITION - 1/2W 1M-K**	
R9A04	103P145020	R-CARBON - 1/2W 180K-J	
R9A05	**109C010010**	**R-COMPOSITION - 1/2W 1M-K**	
R9A06	**109C010010**	**R-COMPOSITION - 1/2W 1M-K**	
R9A09	103P144090	R-CARBON - 1/2W 100K-J	
R9A10	103P713040	R-CARBON - 1/4W 5.6K-J	
R9A11	103P144090	R-CARBON - 1/2W 100K-J	
R9A12	103P713030	R-CARBON - 1/4W 4.7K-J	

Ref #	Part #	Part Name & Description	[#]
R9A20	103P713010	R-CARBON - 1/4W 3.3K-J	
R9A21	103C393090	R-METAL-P - 3W 15K-J	
R9A22	103C183070	R-METAL - 2W 10K-J	
R9A23	103P710070	R-CARBON - 1/4W 33-J	
R9A24	103P713040	R-CARBON - 1/4W 5.6K-J	
R9A25	103P713010	R-CARBON - 1/4W 3.3K-J	
R9A26	103P712030	R-CARBON - 1/4W 680-J	
R9A27	103C187050	R-METAL - 2W 0.39-J	
R9A28	103P711070	R-CARBON - 1/4W 220-J	
R9A29	103C187050	R-METAL - 2W 0.39-J	
R9A30	103P712090	R-CARBON - 1/4W 2.2K-J	
R9A31	103P712050	R-CARBON - 1/4W 1K-J	
R9A32	103P713070	R-CARBON - 1/4W 10K-J	
R9A33	103P711030	R-CARBON - 1/4W 100-J	
R9A34	103P710050	R-CARBON - 1/4W 22-J	
R9A35	103P715010	R-CARBON - 1/4W 150K-J	
R9A36	103P714090	R-CARBON - 1/4W 100K-J	
R9A37	103P712090	R-CARBON - 1/4W 2.2K-J	
R9A38	103P713030	R-CARBON - 1/4W 4.7K-J	
R9A39	103P711030	R-CARBON - 1/4W 100-J	
R9A40	103P712010	R-CARBON - 1/4W 470-J	
R9A41	103P712050	R-CARBON - 1/4W 1K-J	
R9A42	103P712050	R-CARBON - 1/4W 1K-J	
R9A44	103P463050	R-METAL - 1/4W 2.7K-F	
R9A49	103P145020	R-CARBON - 1/2W 180K-J	
R9A50	103P413070	R-CARBON - 1/4W 10K-J	
R9A51	103P715050	R-CARBON - 1/4W 330K-J	
R9A52	103P710090	R-CARBON - 1/4W 47-J	
R9A53	103P712030	R-CARBON - 1/4W 680-J	
R9A54	102P107000	R-WIRE - 2W 0.15-K	
R9A55	102P106090	R-WIRE - 2W 0.12-K	
R9A56	103P713010	R-CARBON - 1/4W 3.3K-J	
R9A57	103P713010	R-CARBON - 1/4W 3.3K-J	
R9A58	103P710010	R-CARBON - 1/4W 10-J	
R9A59	103P710020	R-CARBON - 1/4W 12-J	
R9A60	103P714050	R-CARBON - 1/4W 47K-J	
R9A61	103P713040	R-CARBON - 1/4W 5.6K-J	
R9A62	103P713070	R-CARBON - 1/4W 10K-J	
R9A63	103P713020	R-CARBON - 1/4W 3.9K-J	
R9A66	103P713070	R-CARBON - 1/4W 10K-J	
R9A67	103P710050	R-CARBON - 1/4W 22-J	
R9A68	103C180050	R-METAL - 2W 22-J	
R9A69	103C180050	R-METAL - 2W 22-J	
R9A71	103P145030	R-CARBON - 1/2W 220K-J	
R9A73	103P412050	R-CARBON - 1/4W 1K-J	
R9A74	103P144020	R-CARBON - 1/2W 27K-J	
R9A75	103P714090	R-CARBON - 1/4W 100K-J	
R9A77	103P714090	R-CARBON - 1/4W 100K-J	
R9A78	103P711030	R-CARBON - 1/4W 100-J	
R9A79	103P711030	R-CARBON - 1/4W 100-J	
R9A84	103P715050	R-CARBON - 1/4W 330K-J	
R9A85	103P714080	R-CARBON - 1/4W 82K-J	
R9B12	103P140010	R-CARBON - 1/2W 10-J	
R9B13	103P140010	R-CARBON - 1/2W 10-J	
R9C00	103C188080	R-METAL - 2W 4.7J	
R9C01	103C398020	R-METAL-P - 3W 1.5-K	
R9C20	103C398020	R-METAL-P - 3W 1.5-K	
R9C21	103C398050	R-METAL-P - 3W 2.7-K	
R9D00	**109D036020**	**R-COMPOSITION - 1/2W 4.7M-K**	

[#] Model Legend:

(1) WS-B55, (2) WS-48511, (3) WS-55511, (4) WS-55711, (5) WS-65511, (6) WS-65611, (7) WS-65711, (8) WS-65712, (9) WS-73711

Ref #	Part #	Part Name & Description	[#]

CAPACITORS AND TRIMMERS

C-CER-CHIP Capactiors (By Value)

Value	Part #	Value	Part #
16V 0.068M-J?	172P392030	50V 1000P	141P143050
16V 10M-M	181P502030	B50V 1000P-K	141P140090
16V 22M-M	181P502040	B50V 1500P-K	141P141010
50V 1000P-J	172P390010	B50V 2200P-K	141P141030
50V 1M-M 105C	181P526010	CH50V 2700P-J	154P337040
6.3V 22M-M	181P500010	B50V 3300P-K	141P141050
6.3V 47M-M	181P500030	B50V 4700P-K	141P141070
SL50V 2P-C	154P350040	SL50V 5600P-J	154P329030
CJ50V 3P-C	154P340040	B50V 6800P-K	141P141090
CH50V 10P-C	154P341010	B50V 8200P-K	141P142000
CH50V 15P-J	154P341050	16V 0.01M-J	172P391030
SL50V 15P-J	154P351060	B50V 0.01M-K	141P142010
CH50V 22P-J	154P341090	F50V 0.01M-Z	141P143080
SL50V 27P-J	154P352020	B50V 0.012M-K	141P142020
CH50V 33P-J	154P342030	B50V 0.015M-K	141P142030
SL50V 33P-J	154P352040	B25V 0.033M-K	141P142070
CH50V 39P-J	154P342050	B25V 0.047M-K	141P142090
CH50V 47P-J	154P342070	F50V 0.047M-Z	141P144010
SL50V 47P-J	154P352080	B25V 0.068M-K	141P143010
SL50V 56P-J	154P353000	16V 0.1M-J	172P392050
CH50V 82P-J	154P343030	B16V 0.1M-K	141P143030
CH50V 100P-J	154P343050	F25V 0.1M-Z	141P144020
SL50V 100P-J	154P353060	F50V 0.1M-Z	141P135080
50V 120P-J	154P343070	F50V 0.1M-Z	141P134090
CH50V 150P-J	154P343090	B25V 0.15M-K	141P139050
SL50V 150P-J	154P354000	B16V 0.22M-K	141P139070
B50V 220P-K	141P140010	B16V 0.47M-K	141P139090
CH50V 220P-J	154P344030	F16V 0.47M-Z	141P144050
CH50V 270P-J	154P344050	B16V 1M-K	141P134070
CH50V 330P-J	154P344070	F16V 1M-Z	141P144060
B50V 390P-K	141P140040	F16V 1M-Z	141P135070
B50V 470P-K	141P140050	F16V 1M-Z	141P144060
CH50V 470P-J	154P345010	50V 2.2M-M 105C	181P526020
SL50V 470P-J	154P325020	6.3V 22M-M 105C	181P520010
CH25V 560P-J	154P345030	6.3V 47M-M 105C	181P520030
B50V 560P-K	141P140060	16V 47M-M 105C	181P522060
CH25V 680P-J	154P345050	6.3V 100M-M 105C	181P520040
CH25V 1000P-J	154P345090		

Conventional Capacitors (By Ref #)

Ref #	Part #	Description	[#]
Ref #	Part #	Part Name & Description	[#]
C12	181P508000	C-ELEC - 4V 100M-M	
C1A10	181P355090	C-ELEC - 50V 100M-M	
C1A29	181P352040	C-ELEC - 16V 100M-M	
C1A30	181P352040	C-ELEC - 16V 100M-M	
C1A31	181P352040	C-ELEC - 16V 100M-M	
C1A50	172P262010	C-M-POLY - 50V 0.047M-J	
C1B10	181P355090	C-ELEC - 50V 100M-M	
C1B29	181P352040	C-ELEC - 16V 100M-M	
C1B30	181P352040	C-ELEC - 16V 100M-M	
C1B31	181P352040	C-ELEC - 16V 100M-M	
C1B50	172P262010	C-M-POLY - 50V 0.047M-J	
C2A00	181P352030	C-ELEC - 16V 47M-M	
C2A50	181P352030	C-ELEC - 16V 47M-M	
C2A51	181P352030	C-ELEC - 16V 47M-M	

Ref #	Part #	Part Name & Description	[#]
C2A60	181P212060	C-ELEC - 16V 47M-M	
C2A62	181P352040	C-ELEC - 16V 100M-M	
C2A63	181P352040	C-ELEC - 16V 100M-M	
C2A64	181P352040	C-ELEC - 16V 100M-M	
C2A65	181P352040	C-ELEC - 16V 100M-M	
C2A66	181P352040	C-ELEC - 16V 100M-M	
C2A67	181P352040	C-ELEC - 16V 100M-M	
C2B00	181P352030	C-ELEC - 16V 47M-M	
C2B50	181P352030	C-ELEC - 16V 47M-M	
C2B51	181P352030	C-ELEC - 16V 47M-M	
C2D04	181P352040	C-ELEC - 16V 100M-M	
C2D08	181P355080	C-ELEC - 50V 47M-M	
C2D17	181P352010	C-ELEC - 16V 22M-M	
C2D19	181P352030	C-ELEC - 16V 47M-M	
C2E02	181P355040	C-ELEC - 50V 4.7M-M	
C2E03	181P352030	C-ELEC - 16V 47M-M	
C2E24	181P352030	C-ELEC - 16V 47M-M	
C2E33	181P355040	C-ELEC - 50V 4.7M-M	
C2F30	181P352040	C-ELEC - 16V 100M-M	
C2F40	181P352040	C-ELEC - 16V 100M-M	
C2F54	181P210040	C-ELEC - 6.3V 100M-M	
C2F64	181P210040	C-ELEC - 6.3V 100M-M	
C2F70	181P212060	C-ELEC - 16V 47M-M	
C2F80	181P212060	C-ELEC - 16V 47M-M	
C2H33	181P355040	C-ELEC - 50V 4.7M-M	
C2H60	181P352030	C-ELEC - 16V 47M-M	
C2H63	181P352030	C-ELEC - 16V 47M-M	
C2K01	181P216050	C-ELEC - 50V 10M-M	
C2K03	181P216050	C-ELEC - 50V 10M-M	
C2K08	181P216050	C-ELEC - 50V 10M-M	
C2K10	181P216050	C-ELEC - 50V 10M-M	
C2K15	181P216050	C-ELEC - 50V 10M-M	
C2K17	181P216050	C-ELEC - 50V 10M-M	
C2K24	181P124040	C-ELEC-NP - 50V 10M-M	
C2K30	181P124040	C-ELEC-NP - 50V 10M-M	
C2K50	181P216050	C-ELEC - 50V 10M-M	
C2K52	181P216050	C-ELEC - 50V 10M-M	
C2K54	181P216050	C-ELEC - 50V 10M-M	
C2K60	181P216050	C-ELEC - 50V 10M-M	
C2K63	181P216050	C-ELEC - 50V 10M-M	
C2K65	181P212070	C-ELEC - 16V 100M-M	
C2L01	181P216050	C-ELEC - 50V 10M-M	
C2L03	181P216050	C-ELEC - 50V 10M-M	
C2L08	181P216050	C-ELEC - 50V 10M-M	
C2L10	181P216050	C-ELEC - 50V 10M-M	
C2L15	181P216050	C-ELEC - 50V 10M-M	
C2L17	181P216050	C-ELEC - 50V 10M-M	
C2L22	181P216050	C-ELEC - 50V 10M-M	
C2L24	181P216050	C-ELEC - 50V 10M-M	
C2L30	181P216050	C-ELEC - 50V 10M-M	
C2L49	181P122070	C-ELEC-NP - 25V 10M-M	
C2L50	181P216050	C-ELEC - 50V 10M-M	
C2L60	181P216050	C-ELEC - 50V 10M-M	
C2L65	181P212070	C-ELEC - 16V 100M-M	
C2M00	181P351070	C-ELEC - 10V 470M-M	
C2M02	181P351070	C-ELEC - 10V 470M-M	
C2M03	181P212070	C-ELEC - 16V 100M-M	
C2M20	181P352080	C-ELEC - 16V 1000M-M	
C2M22	181P352030	C-ELEC - 16V 47M-M	
C2M23	181P352030	C-ELEC - 16V 47M-M	

[#] Model Legend:

(1) WS-B55, (2) WS-48511, (3) WS-55511, (4) WS-55711, (5) WS-65511, (6) WS-65611, (7) WS-65711, (8) WS-65712, (9) WS-73711

Ref #	Part #	Part Name & Description	[#]
C2V07	181P352050	C-ELEC - 16V 220M-M	
C2V43	181P355060	C-ELEC - 50V 22M-M	
C2V54	181P355050	C-ELEC - 50V 10M-M	
C2V72	181P352050	C-ELEC - 16V 220M-M	
C2W04	181P352050	C-ELEC - 16V 220M-M	
C2W05	181P352030	C-ELEC - 16V 47M-M	
C2W09	181P352030	C-ELEC - 16V 47M-M	
C2W14	181P352030	C-ELEC - 16V 47M-M	
C2X01	181P352040	C-ELEC - 16V 100M-M	
C2X03	181P352030	C-ELEC - 16V 47M-M	
C2Y01	181P352030	C-ELEC - 16V 47M-M	
C2Y11	181P352030	C-ELEC - 16V 47M-M	
C2Y30	181P352030	C-ELEC - 16V 47M-M	
C3A10	181P355020	C-ELEC - 50V 2.2M-M	
C3A11	181P352040	C-ELEC - 16V 100M-M	
C3A15	181P124020	C-ELEC-NP - 50V 4.7M-M NP	
C3A16	181P355050	C-ELEC - 50V 10M-M	
C3A17	181P355050	C-ELEC - 50V 10M-M	
C3A22	181P355050	C-ELEC - 50V 10M-M	
C3A24	181P355040	C-ELEC - 50V 4.7M-M	
C3A27	181P352060	C-ELEC - 16V 330M-M	
C3A29	181P355050	C-ELEC - 50V 10M-M	
C3A30	181P352040	C-ELEC - 16V 100M-M	
C3A34	181P355050	C-ELEC - 50V 10M-M	
C3A35	181P355040	C-ELEC - 50V 4.7M-M	
C3A36	181P355040	C-ELEC - 50V 4.7M-M	
C3A37	181P355040	C-ELEC - 50V 4.7M-M	
C3A38	181P124020	C-ELEC-NP - 50V 4.7M-M NP	
C3E01	181P354050	C-ELEC - 35V 47M-M	
C3E02	181P355010	C-ELEC - 50V 1M-M	
C3E04	181P355010	C-ELEC - 50V 1M-M	
C3E06	181P355050	C-ELEC - 50V 10M-M	
C3E07	181P353090	C-ELEC - 25V 2200M-M	
C3E09	172P262050	C-M-POLY - 50V 0.1M-J	
C3E11	172P262050	C-M-POLY - 50V 0.1M-J	
C3E12	172P262050	C-M-POLY - 50V 0.1M-J	
C3E14	172P262050	C-M-POLY - 50V 0.1M-J	
C4A00	181P355050	C-ELEC - 50V 10M-M	
C4A04	172P262050	C-M-POLY - 50V 0.1M-J	
C4A05	172P262050	C-M-POLY - 50V 0.1M-J	
C4A10	181P352030	C-ELEC - 16V 47M-M	
C4A14	181P352030	C-ELEC - 16V 47M-M	
C4A34	181P352030	C-ELEC - 16V 47M-M	
C4A35	172P262090	C-M-POLY - 50V 0.22M-J	
C4B01	172P262050	C-M-POLY - 50V 0.1M-J	
C4B02	181P358000	C-ELEC - 35V 1000M-M	
C4B03	172P383030	C-M-POLY - 100V 0.47M-K	
C4B04	181P354060	C-ELEC - 35V 100M-M	
C4B06	181P353020	C-ELEC - 25V 10M-M	
C4B09	181P355060	C-ELEC - 50V 22M-M	
C4B10	181P355070	C-ELEC - 50V 33M-M	
C4B11	181P353090	C-ELEC - 25V 2200M-M	
C4B13	172P262020	C-M-POLY - 50V 0.056M-J	
C5102	181P355010	C-ELEC - 50V 1M-M	
C5112	181P355010	C-ELEC - 50V 1M-M	
C5122	181P355010	C-ELEC - 50V 1M-M	
C51K7	181P351050	C-ELEC - 10V 220M-M	
C51P1	181P350050	C-ELEC - 6.3V 470M-M	
C5221	181P353060	C-ELEC - 25V 330M-M SO	
C5234	181P355090	C-ELEC - 50V 100M-M	

Ref #	Part #	Part Name & Description	[#]
C5235	181P355090	C-ELEC - 50V 100M-M	
C5251	181P351070	C-ELEC - 10V 470M-M	
C5253	181P351060	C-ELEC - 10V 330M-M	
C5255	181P351060	C-ELEC - 10V 330M-M	
C5257	181P350060	C-ELEC - 6.3V 1000M-M	
C5258	181P350050	C-ELEC - 6.3V 470M-M	
C5291	181P353060	C-ELEC - 25V 330M-M SO	
C5292	181P353060	C-ELEC - 25V 330M-M SO	
C5295	181P353060	C-ELEC - 25V 330M-M SO	
C5297	181P353060	C-ELEC - 25V 330M-M SO	
C52F4	181P352040	C-ELEC - 16V 100M-M	
C52G5	181P352040	C-ELEC - 16V 100M-M	
C52G6	181P355010	C-ELEC - 50V 1M-M	
C5305	181P350040	C-ELEC - 6.3V 330M-M	
C54K2	189P197020	C-ELE-DOUBLE-LA - FM0H473Z/EECS5R5T473Z	
C55C2	181P351040	C-ELEC - 10V 100M-M	
C55C3	181P351040	C-ELEC - 10V 100M-M	
C55C4	181P351040	C-ELEC - 10V 100M-M	
C5612	181P122070	C-ELEC-NP - 25V 10M-M	
C5617	181P122070	C-ELEC-NP - 25V 10M-M	
C56A1	172P264010	C-M-POLY - 50V 2.2M-J	
C56A2	172P264010	C-M-POLY - 50V 2.2M-J	
C56A9	181P355020	C-ELEC - 50V 2.2M-M	
C5902	181P350050	C-ELEC - 6.3V 470M-M	
C59A6	181P351070	C-ELEC - 10V 470M-M	
C59E0	181P350060	C-ELEC - 6.3V 1000M-M	
C59E2	181P350050	C-ELEC - 6.3V 470M-M	
C59M0	181P351070	C-ELEC - 10V 470M-M	
C59X0	181P353060	C-ELEC - 25V 330M-M SO	
C59X2	181P352020	C-ELEC - 16V 33M-M	
C59X3	181P352020	C-ELEC - 16V 33M-M	
C59X4	181P352020	C-ELEC - 16V 33M-M	
C59X5	181P352020	C-ELEC - 16V 33M-M	
C59X6	181P352020	C-ELEC - 16V 33M-M	
C5A03	142P020050	C-CER - B50V 470P-K	
C5A04	172P261030	C-M-POLY - 50V 0.01M-J	
C5A10	181P191000	C-ELEC - 160V 22M-M/Q	
C5A11	181P354060	C-ELEC - 35V 100M-M	
C5A13	181P352040	C-ELEC - 16V 100M-M	
C5A14	181P354060	C-ELEC - 35V 100M-M	
C5A15	181P354060	C-ELEC - 35V 100M-M	
C5A21	172P262050	C-M-POLY - 50V 0.1M-J	
C5A22	181P355040	C-ELEC - 50V 4.7M-M	
C5A23	181P355050	C-ELEC - 50V 10M-M	
C5A31	172P580050	C-M-PLA-PP - 1800V 1500P-J	
C5A32	172P581030	C-M-PLA-PP - 1800V 3300P-J	
C5A33	172P581030	C-M-PLA-PP - 1800V 3300P-J	
C5A34	154P262000	C-CER - R2KV 220P-K	
C5A35	142P011070	C-CER - B500V 2200P-K	
C5A36	172P524010	C-M-POLY - 250V 2.2M-J	
C5A39	142P011000	C-CER - B500V 560P-K	
C5A40	142P011000	C-CER - B500V 560P-K	
C5A41	181P353080	C-ELEC - 25V 1000M-M	
C5A42	181P352030	C-ELEC - 16V 47M-M	
C5A43	181P190050	C-ELEC - 160V 1M-M/Q	
C5A51	**154P260010**	**C-CER - R1KV 220P-K**	
C5A52	**172P460010**	**C-M-PLA-PP - 2000V 1000P-J**	
C5A53	**172P460030**	**C-M-PLA-PP - 2000V 1200P-J**	
C5A54	185D120010	C-ELEC - H160V 330M-M 105C	
C5A55	172P088060	C-PLAST-PP - 630V 6800P-J	

[#] Model Legend:

(1) WS-B55, (2) WS-48511, (3) WS-55511, (4) WS-55711, (5) WS-65511, (6) WS-65611, (7) WS-65711, (8) WS-65712, (9) WS-73711

Ref #	Part #	Part Name & Description	[#]
C5A56	181P355040	C-ELEC - 50V 4.7M-M	
C5A60	172P262050	C-M-POLY - 50V 0.1M-J	
C5A61	181P355040	C-ELEC - 50V 4.7M-M	
C5A64	181P352010	C-ELEC - 16V 22M-M	
C5A65	181P355050	C-ELEC - 50V 10M-M	
C5A69	181P355050	C-ELEC - 50V 10M-M	
C5A70	172P384030	C-M-POLY - 100V 3.3M-K	
C5A71	172P262060	C-M-POLY - 50V 0.12M-J	
C5F02	181P355090	C-ELEC - 50V 100M-M	
C5H01	181P352060	C-ELEC - 16V 330M-M	
C5H04	155P232070	C-CER - CH50V 47P-J	
C5H16	172P186030	C-PLAST-PP - 200V 0.01M-K	
C5H17	172P261030	C-M-POLY - 50V 0.01M-J	
C5H19	181P183010	C-ELEC - 25V 100M-M 105C	
C5H20	181P352040	C-ELEC - 16V 100M-M	
C5H21	181P780080	C-ELEC - 160V 33M-M 105C	
C5H24	181P192060	C-ELEC - 200V 22M-M/Q	
C5K02	181P198040	C-ELEC - 450V 4.7M-M/Q	
C5K03	181P352040	C-ELEC - 16V 100M-M	
C5K04	181P355080	C-ELEC - 50V 47M-M	
C5K05	181P354060	C-ELEC - 35V 100M-M	
C5K12	181P352040	C-ELEC - 16V 100M-M	
C5K14	181P352030	C-ELEC - 16V 47M-M	
C5K15	181P191000	C-ELEC - 160V 22M-M/Q	
C6B01	155P231050	C-CER - CH50V 15P-J	
C6B02	181P195050	C-ELEC - 350V 10M-M	
C6B03	155P231090	C-CER - CH50V 22P-J	
C6B05	181P352030	C-ELEC - 16V 47M-M	
C6B12	154P405000	C-CER - B3KV 1000P-K	
C6B13	142P012010	C-CER - B500V 4700P-K	
C6B14	154P405000	C-CER - B3KV 1000P-K	
C6B16	154P260050	C-CER - R1KV 1000P-K	
C6G01	155P231050	C-CER - CH50V 15P-J	
C6G02	181P195050	C-ELEC - 350V 10M-M	
C6G03	155P232030	C-CER - CH50V 33P-J	
C6G05	181P352030	C-ELEC - 16V 47M-M	
C6G08	155P232050	C-CER - CH50V 39P-J	
C6G12	154P405000	C-CER - B3KV 1000P-K	
C6G13	142P012010	C-CER - B500V 4700P-K	
C6G14	154P405000	C-CER - B3KV 1000P-K	
C6G16	154P260050	C-CER - R1KV 1000P-K	
C6R01	155P231050	C-CER - CH50V 15P-J	
C6R02	181P195050	C-ELEC - 350V 10M-M	
C6R03	155P232010	C-CER - CH50V 27P-J	
C6R05	181P352030	C-ELEC - 16V 47M-M	
C6R12	154P405000	C-CER - B3KV 1000P-K	
C6R13	142P012010	C-CER - B500V 4700P-K	
C6R14	154P405000	C-CER - B3KV 1000P-K	
C7A31	181P352030	C-ELEC - 16V 47M-M	
C7A99	181P352030	C-ELEC - 16V 47M-M	
C7B76	181P352030	C-ELEC - 16V 47M-M	
C7C00	181P352040	C-ELEC - 16V 100M-M	
C7C31	181P352050	C-ELEC - 16V 220M-M	
C7K01	181P352030	C-ELEC - 16V 47M-M	
C7K21	181P355050	C-ELEC - 50V 10M-M	
C7K23	181P352030	C-ELEC - 16V 47M-M	
C7K25	172P262050	C-M-POLY - 50V 0.1M-J	
C7K26	172P262050	C-M-POLY - 50V 0.1M-J	
C7K27	181P355010	C-ELEC - 50V 1M-M	
C7K28	181P355050	C-ELEC - 50V 10M-M	

Ref #	Part #	Part Name & Description	[#]
C7L22	172P262050	C-M-POLY - 50V 0.1M-J	
C8C03	181P184010	C-ELEC - 50V 1000M-M 105C	
C8C05	181P184010	C-ELEC - 50V 1000M-M 105C	
C8C43	142P020080	C-CER - B50V 820P-K	
C8C44	142P020080	C-CER - B50V 820P-K	
C8C45	142P020080	C-CER - B50V 820P-K	
C8C46	142P020080	C-CER - B50V 820P-K	
C8C47	142P020080	C-CER - B50V 820P-K	
C8C48	142P020080	C-CER - B50V 820P-K	
C8C49	155P231050	C-CER - CH50V 15P-J	
C8C50	155P231050	C-CER - CH50V 15P-J	
C8D16	181P352030	C-ELEC - 16V 47M-M	
C8D19	181P352030	C-ELEC - 16V 47M-M	
C8D20	181P352030	C-ELEC - 16V 47M-M	
C8D21	181P352030	C-ELEC - 16V 47M-M	
C8D22	181P352030	C-ELEC - 16V 47M-M	
C8D29	181P355010	C-ELEC - 50V 1M-M	
C8D30	181P352030	C-ELEC - 16V 47M-M	
C8D31	181P352030	C-ELEC - 16V 47M-M	
C8D33	181P352030	C-ELEC - 16V 47M-M	
C8D35	172P262040	C-M-POLY - 50V 0.082M-J	
C8D36	181P352030	C-ELEC - 16V 47M-M	
C8D39	181P352030	C-ELEC - 16V 47M-M	
C8D40	181P352030	C-ELEC - 16V 47M-M	
C8E01	181P352030	C-ELEC - 16V 47M-M	
C8E03	181P352030	C-ELEC - 16V 47M-M	
C8E05	181P352030	C-ELEC - 16V 47M-M	
C8E07	181P352030	C-ELEC - 16V 47M-M	
C8E09	181P352030	C-ELEC - 16V 47M-M	
C8E12	181P352030	C-ELEC - 16V 47M-M	
C8E14	181P352030	C-ELEC - 16V 47M-M	
C8E16	181P352030	C-ELEC - 16V 47M-M	
C8G00	181P352030	C-ELEC - 16V 47M-M	
C8G01	181P352030	C-ELEC - 16V 47M-M	
C8G03	181P352020	C-ELEC - 16V 33M-M	
C8G05	181P352030	C-ELEC - 16V 47M-M	
C8G06	181P352030	C-ELEC - 16V 47M-M	
C8G09	181P352030	C-ELEC - 16V 47M-M	
C8G55	181P352030	C-ELEC - 16V 47M-M	
C9A05	**189P185070**	**C-CER - 250VAC 1000P-M**	
C9A06	**189P185070**	**C-CER - 250VAC 1000P-M**	
C9A07	**189P153040**	**C-M-POLY - 250VAC 0.1M-M**	
C9A08	**189P185090**	**C-CER - 250VAC 2200P-M**	
C9A09	**189P185090**	**C-CER - 250VAC 2200P-M**	
C9A10	**189P185090**	**C-CER - 250VAC 2200P-M**	
C9A11	**189P185090**	**C-CER - 250VAC 2200P-M**	
C9A12	185D122050	C-ELEC - H200V 1000M-M 105C	
C9A13	**189P152070**	**C-M-POLY - 250VAC 0.01M-M**	
C9A14	**189P152070**	**C-M-POLY - 250VAC 0.01M-M**	
C9A15	189P185090	C-CER - 250VAC 2200P-M	
C9A20	189P152070	C-M-POLY - 250VAC 0.01M-M	
C9A22	154P260050	C-CER - R1KV 1000P-K	
C9A23	181P354050	C-ELEC - 35V 47M-M	
C9A24	142P020050	C-CER - B50V 470P-K	
C9A25	155P239000	C-CER - CH50V 180P-J	
C9A27	181P355050	C-ELEC - 50V 10M-M	
C9A28	181P355050	C-ELEC - 50V 10M-M	
C9A29	142P010090	C-CER - B500V 470P-K	
C9A30	181P743090	C-ELEC - 04W 16V	
C9A31	181P743090	C-ELEC - 04W 16V	

[#] Model Legend:

(1) WS-B55, (2) WS-48511, (3) WS-55511, (4) WS-55711, (5) WS-65511, (6) WS-65611, (7) WS-65711, (8) WS-65712, (9) WS-73711

Ref #	Part #	Part Name & Description	[#]
C9A33	181P743070	C-ELEC - 04W 16V	
C9A35	181P352040	C-ELEC - 16V 100M-M	
C9A36	142P010090	C-CER - B500V 470P-K	
C9A39	181P355010	C-ELEC - 50V 1M-M	
C9A40	181P352040	C-ELEC - 16V 100M-M	
C9A42	181P352040	C-ELEC - 16V 100M-M	
C9A43	172P261030	C-M-POLY - 50V 0.01M-J	
C9A50	142P020050	C-CER - B50V 470P-K	
C9A51	181P355090	C-ELEC - 50V 100M-M	
C9A52	154P400070	C-CER - B1KV 2200P-K RA	
C9A53	185D122050	C-ELEC - H200V 1000M-M 105C	
C9A54	154P260080	C-CER - R1KV 3300P-K	
C9A55	172P339080	C-POLY - 50V 680P-J	
C9A56	181P186000	C-ELEC - 50V 100M-M 105C	
C9A57	142P010090	C-CER - B500V 470P-K	
C9A58	185D163020	C-ELEC - H50V 4700M-M 105C	
C9A59	185D122050	C-ELEC - H200V 1000M-M 105C	
C9A60	154P400030	C-CER - B1KV 470P-K	
C9A61	142P010090	C-CER - B500V 470P-K	
C9A62	189D183010	C-ELEC - 400AXW100M	
C9A63	185D121020	C-ELEC - H180V 470M-M 105C	
C9A64	181P190090	C-ELEC - 160V 10M-M/Q	
C9A65	181P194000	C-ELEC - 250V 10M-M/Q	
C9A66	142P012050	C-CER - B500V 0.01M-K	
C9A67	142P012050	C-CER - B500V 0.01M-K	
C9A68	142P010090	C-CER - B500V 470P-K	
C9A69	181P358030	C-ELEC - 35V 4700M-M	
C9A73	181P358030	C-ELEC - 35V 4700M-M	
C9A74	142P010090	C-CER - B500V 470P-K	
C9B01	181P182030	C-ELEC - 16V 1000M-M 105C	
C9B02	181P182030	C-ELEC - 16V 1000M-M 105C	
C9B03	181P182030	C-ELEC - 16V 1000M-M 105C	
C9B13	181P182030	C-ELEC - 16V 1000M-M 105C	
C9B14	181P182030	C-ELEC - 16V 1000M-M 105C	
C9B17	181P182030	C-ELEC - 16V 1000M-M 105C	
C9B18	181P182030	C-ELEC - 16V 1000M-M 105C	
C9C00	181P350010	C-ELEC - 16V 4700M-M	
C9C02	181P352030	C-ELEC - 16V 47M-M	
C9C05	181P352030	C-ELEC - 16V 47M-M	
C9C10	181P352030	C-ELEC - 16V 47M-M	
C9C12	181P352030	C-ELEC - 16V 47M-M	
C9C20	181P352030	C-ELEC - 16V 47M-M	
C9C23	181P355050	C-ELEC - 50V 10M-M	
C9C24	181P352030	C-ELEC - 16V 47M-M	
C9C26	181P352030	C-ELEC - 16V 47M-M	
C9C40	181P352030	C-ELEC - 16V 47M-M	
C9C42	181P352030	C-ELEC - 16V 47M-M	
C9C52	181P352030	C-ELEC - 16V 47M-M	
C9D00	**189P153040**	**C-M-POLY - 250VAC 0.1M-M**	
C9D01	**189P153040**	**C-M-POLY - 250VAC 0.1M-M**	
CF2E00	299P128010	CERAMIC-OSC - CSB500F2	
CF2H01	299P128010	CERAMIC-OSC - CSB500F2	
CF3A01	299P208010	CERAMIC-OSC - C5B503F58	

SWITCHES

S5400	432C082010	SW-PUSH - SPPJ322300	
S7L20	432P089010	SW-KEY-BOARD - PUSH SWITCH	
S7L21	432P089010	SW-KEY-BOARD - PUSH SWITCH	
S7L22	432P089010	SW-KEY-BOARD - PUSH SWITCH	
S7L23	432P089010	SW-KEY-BOARD - PUSH SWITCH	
S7L24	432P089010	SW-KEY-BOARD - PUSH SWITCH	
S7L25	432P089010	SW-KEY-BOARD - PUSH SWITCH	
S7L26	432P089010	SW-KEY-BOARD - PUSH SWITCH	
S7L27	432P089010	SW-KEY-BOARD - PUSH SWITCH	
S7L28	432P089010	SW-KEY-BOARD - PUSH SWITCH	
S7L29	432P089010	SW-KEY-BOARD - PUSH SWITCH	
SF2	296P165010	SAW-FILTER - SAF44MTC80ZL	
SF5201	296P167010	SAW-FILTER - SAF44.00MTG220ZL	

MISCELLANEOUS

	246C351010	AC-POWER-CORD	8
	246C351030	AC-POWER-CORD	12345679
	305P702020	RF-SW - YAA41-0126G	
	598D417010	PLATE-RF SWITCH - COLD ROLL	
	330P276050	**DEFL-YOKE**	
	338P054010	SVM-ASSY	1235
	338P054020	SVM-ASSY	46789
	411D023010	CORE-FERRITE	
	411D024020	CORE-FERRITE - ZCAT2132-1130	
	411D033010	CORE-FERRITE	
	411D044010	CORE-FERRITE	
	449C141030	**SOCKET-CRT**	
	453B035010	**CAP-ANODE - SHORT - RED**	**12345678**
	453B035020	**CAP-ANODE - LONG - G&B**	**12345678**
	453B035030	**CAP-ANODE - SHORT - RED**	**9**
	453B035040	**CAP-ANODE - LONG - G&B**	**9**
	453C021030	**LEAD-ANODE - FBT-HV**	
	480P053010	SPEAKER - 5 INCH	2
	480P057010	SPEAKER - 6.5 INCH	479
	480P058010	SPEAKER - 3 INCH	4789
	480P063010	SPEAKER - 6 INCH	135
	480P066010	SPEAKER - 6 INCH	6
	480P069010	SPEAKER - 7 INCH	8
	490P154010	LENS - RED	12345678
	490P154020	LENS - BLUE/GREEN	12345678
	490P195010	LENS - ALL COLORS	9
	597D843010	STIFFENER-MIRROR - 3/4"X3/4" TUBING	5-7
	598D339010	BRACKET,SCREEN SIDE - METAL	2
	622B009020	TRAY CRT	12345678
	622C067010	CRT-TRAY	9
	622C086010	MIRROR-CLIP - PLASTIC	2
	635B109010	STIFFENER-TOP - METAL	2
	642C340010	BOARD-MIRROR	5-7
	642C352010	CLIP-MIRROR	134
	767C031010	MIRROR - 73"	9
	767D048090	MIRROR - 65"	5-8
	767D055040	MIRROR - 55"	4
	767D072030	MIRROR - 55"	1&3
	767D072040	MIRROR - 48"	2
	920P016010	**HV-BLOCK - MSC102**	
AG5K00	224D019040	AIR-GAP - 2.0+-0.5KV S.LEAD	
AG6B01	224D019090	AIR-GAP - 1.5+-0.5KV S.LEAD	
AG6G01	224D019090	AIR-GAP - 1.5+-0.5KV S.LEAD	
AG6R01	224D019090	AIR-GAP - 1.5+-0.5KV S.LEAD	
BF56A1	409P381020	BP-FILTER - H354BAI	
F5A00	**283P043060**	**FUSE - LF251 3A**	
F5A01	**283P043060**	**FUSE - LF251 3A**	
F9A01	**283P044020**	**FUSE - LF251 10A**	

[#] Model Legend:
(1) WS-B55, (2) WS-48511, (3) WS-55511, (4) WS-55711, (5) WS-65511, (6) WS-65611, (7) WS-65711, (8) WS-65712, (9) WS-73711

Ref #	Part #	Part Name & Description	[#]
F9A02	**283P044020**	**FUSE - LF251 10A**	
F9A03	**283P043090**	**FUSE - LF251 5A**	
F9A04	**283P043090**	**FUSE - LF251 5A**	
F9A05	**283P043090**	**FUSE - LF251 5A**	
F9A06	**283P043090**	**FUSE - LF251 5A**	
F9B00	**283P128020**	**FUSE-CHIP - AC125V/100V 2A**	
F9B01	**283P128050**	**FUSE-CHIP - AC125V/100V 4A**	
F9D00	**283D131040**	**FUSE - S10A 125A**	
J5100	451P246010	JACK-1394 - MINI JACK	
J5110	451P246010	JACK-1394 - MINI JACK	
J5120	451P246010	JACK-1394 - MINI JACK	
J54K1	451C129010	JACK-MINI - AV NET/IR BLAST	
J54K2	451C129010	JACK-MINI - AV NET/IR BLAST	
J5601	440C393030	PIN-JACK-BOARD-1P	
K9A50	**287P049080**	**RELAY-POWER - DG12D1-0(M)**	
PC9A20	**268P058020**	**PHOTO-COUPLER - ON3131-R/ON3161-R**	
PC9A21	**268P058020**	**PHOTO-COUPLER - ON3131-R/ON3161-R**	
PC9A50	**268P058020**	**PHOTO-COUPLER - ON3131-R/ON3161-R**	
PC9A51	**268P058020**	**PHOTO-COUPLER - ON3131-R/ON3161-R**	
PJ205	440C414020	PIN-JACK-BOARD-2P	4789
PJ2J00	440C386010	PIN-JACK-BOARD-6P	12356
PJ2J00	440C386030	PIN-JACK-BOARD-6P	4789
PJ2J01	440C386010	PIN-JACK-BOARD-6P	12356
PJ2J01	440C386030	PIN-JACK-BOARD-6P	4789
PJ2J02	440C402010	PIN-JACK-BOARD-5P	12356
PJ2J02	440C402020	PIN-JACK-BOARD-5P	4789
PJ2J03	440C385010	PIN-JACK-BOARD-6P	12356
PJ2J03	440C385030	PIN-JACK-BOARD-6P	4789
PJ2J04	440C261070	PIN-JACK-BOARD-2P	12356
PJ2J04	440C383040	PIN-JACK-BOARD-2P	4789
PJ2J05	440C414010	PIN-JACK-BOARD-2P	12356
PJ2J06	452C315010	VGA CONNECTOR	
PJ2J07	440C261070	PIN-JACK-BOARD-2P	12356
PJ2J07	440C383040	PIN-JACK-BOARD-2P	4789
PJ2J08	440C385020	PIN-JACK-BOARD-6P	12356
PJ2J08	440C385040	PIN-JACK-B0ARD-6P	4789
PJ2J09	440C414010	PIN-JACK-BOARD-2P	12356
PJ2J09	440C414020	PIN-JACK-BOARD-2P	4789
PJ2J11	440C231010	JACK-3PIN - FRONT A/V INPUT	12356
PJ2J11	440C384010	PIN-JACK-BOARD-3P	4789
PJ7C01	451C129010	JACK-MINI - AV NET/IR BLAST	
PJ7C02	451C129010	JACK-MINI - AV NET/IR BLAST	
TU1A01	**295P500010**	**TUNER-RF - ENG26515G**	
TU1B01	295P500010	TUNER-RF - ENG26515G	
TU5200	**295P490030**	**TUNER-RF-DTV - ENA46914P4**	
X2A20	285P029030	QUARTZ-CRYST - 4.000 MHZ	
X2B20	285P029030	QUARTZ-CRYST - 4.000 MHZ	
X2C31	285P374050	QUARTZ-CRYST - 20.000MHZ	
X2E26	285P374020	QUARTZ-CRYST - 3.579545MHZ	
X2H26	285P066010	QUARTZ-CRYST - 3.579545MHZ	
X50	285P410060	QUARTZ-CRYST - 26.800MHZ	
X51X0	285P410020	QUARTZ-CRYST - 24.576MHZ	
X5400	285P410050	QUARTZ-CRYST - 9.216MHZ	
X54A0	285P410040	QUARTZ-CRYST - 25.0MHZ	
X5500	285P410030	QUARTZ-CRYST - 20.25MHZ	
X55A0	285P410090	QUARTZ-CRYST - 13.5MHZ	
X7A13	285P374040	QUARTZ-CRYST - 10.000MHZ	
X7H00	285P335040	QUARTZ-CRYST - 60.000MHZ	
X7H01	285P335050	QUARTZ-CRYST - 80.000MHZ	

Ref #	Part #	Part Name & Description	[#]
Z5900	**283P128050**	**FUSE-CHIP - AC125V/100V 4A**	
Z5901	**283P128050**	**FUSE-CHIP - AC125V/100V 4A**	
Z7K01	939P617010	UNIT-PREAMP - GP1U283Q	

PRINTED CIRCUIT BOARDS

930B866012	ASSY-PWB-MAIN	1346578
930B866013	ASSY-PWB-MAIN	9
930B866014	ASSY-PWB-MAIN	2
930B879002	ASSY-PWB-POWER	
930B880003	ASSY-PWB-SIGNAL	12356
930B880004	ASSY-PWB-SIGNAL	478
930B880005	ASSY-PWB-SIGNAL	9
955C230002	ASSY-DM	
935C965003	ASSY-PWB-CRT	
935C966002	ASSY-PWB-2HDW	
935C967001	ASSY-PWB-TERMINAL	12356
935C967002	ASSY-PWB-TERMINAL	4789
935C974001	ASSY-PWB-DEMOD-B	1
935C974002	ASSY-PWB-DEMOD-B	23456789
935C978001	ASSY-PWB-E2P	1
935C978002	ASSY-PWB-E2P	23456789
935C979002	ASSY-PWB-DEMOD	1
935C986002	ASSY-PWB-DM POWER	
935D521006	ASSY-PWB-DBF	
935D581002	ASSY-PWB-PREAMP	
935D583001	ASSY-PWB-JUNGLE	1
935D583002	ASSY-PWB-JUNGLE	23456789
935D584002	ASSY-PWB-SVM	
935D585001-48	ASSY-PWB-CONV-GENE	2
935D585001-55	ASSY-PWB-CONV-GENE	134
935D585001-65	ASSY-PWB-CONV-GENE	5678
935D585001-73	ASSY-PWB-CONV-GENE	9
935D586001	ASSY-PWB-3DYC/MD	
935D587002	ASSY-PWB-CONTROL 2	
935D588003	ASSY-PWB-FRONT	12356
935D588004	ASSY-PWB-FRONT	4789
935D605002	ASSY-PWB-CROSS OVER	4789

COSMETIC PARTS

242D525010	AC3 CABLE - AUDIO CABLE	
299P254020	IR-EMITTER, 4-HEAD - T-IR-0	
702A393050	CONTROL PANEL	5
702A398040	COVER-CONTROL	6
702A401020	COVER CONTROL	479
702A403020	CONTROL PANEL	1&3
702A407010	DM, BACK PANEL - PLASTIC	
702A399010	TERMINAL-BOARD	
760A007020	TERMINAL INLAY - PC-SHEET	
760A008010	DM TERMINAL INLAY - PC-SHT	
703B035010	A/V-MOUNT-DOOR - PLASTIC	8
704B192010	RESET BUTTON	1345679
704B198010	PANEL-BUTTON - PLASTIC	8
752A003020	GRILLE-SP	7
761A159040	GRILLE-SP	1&3
761A171040	GRILLE-SPEAKER	5
761A173030	GRILLE-SPEAKER	6
761A175010	GRILLE-SP-LEFT - 65"	7
761A175020	GRILLE-SP-RIGHT - 65"	7
761A186010	GRILLE-SP-LEFT - 73"	9

[#] Model Legend:

(1) WS-B55, (2) WS-48511, (3) WS-55511, (4) WS-55711, (5) WS-65511, (6) WS-65611, (7) WS-65711, (8) WS-65712, (9) WS-73711

Ref #	Part #	Part Name & Description	[#]
	761A186020	GRILLE-SP-RIGHT - 73"	9
	761A195010	GRILLE-SPEAKER	2
	761A174030	GRILLE, SPEAKER	4
	761A174040	GRILLE, SPEAKER	4
	761A199010	GRILLE-SPEAKER	8
	752A003030	SPEAKER GRILL, TOP - PS	9
		ACCESSORIES	
	290P109010	TRANSMITTER-REMOTE - EUR761	
	I/B WSB55	IB - OWNERS GUIDE	
	I/QR V21	QUICK REFERENCE GUIDE	
	I/NET V21	NET COMMAND GUIDE - BOOK	
	I/SEP GUIDEV21		
		IB-SEPARATION GUIDE	5679
	I/SEP GUIDEWS65712		
		IB-SEPARATION GUIDE	8

Ref #	Part #	Part Name & Description	[#]

[#] Model Legend:
(1) WS-B55, (2) WS-48511, (3) WS-55511, (4) WS-55711, (5) WS-65511, (6) WS-65611, (7) WS-65711, (8) WS-65712, (9) WS-73711

Ref #	Part #	Part Name & Description	[#]
		SCREEN ASSEMBLY PARTS	
		WS-48511 (Figure 1)	
(1)	491P138010	SCREEN-LENTICULAR - 48"	2
(2)	491P139010	LENS-FRESNEL - 48"	2
(3)	622B010010	HOLDER-TOP	2
(4)	622B011010	HOLDER-BOTTOM	2
(5)	622B012010	HOLDER-SIDE	2
(6)	622B013010	CLIP-SHIELD-SIDE - 48"	2
(7)	751A005020	FRAME-SCREEN-BEZEL - PLASTIC	2
(8)	760D628060	DIAMOND SHIELD - 48"	2
(9)	598D339010	BRACKET,SCREEN SIDE - METAL	2
(10)	635B109010	STIFFENER-TOP - METAL	2

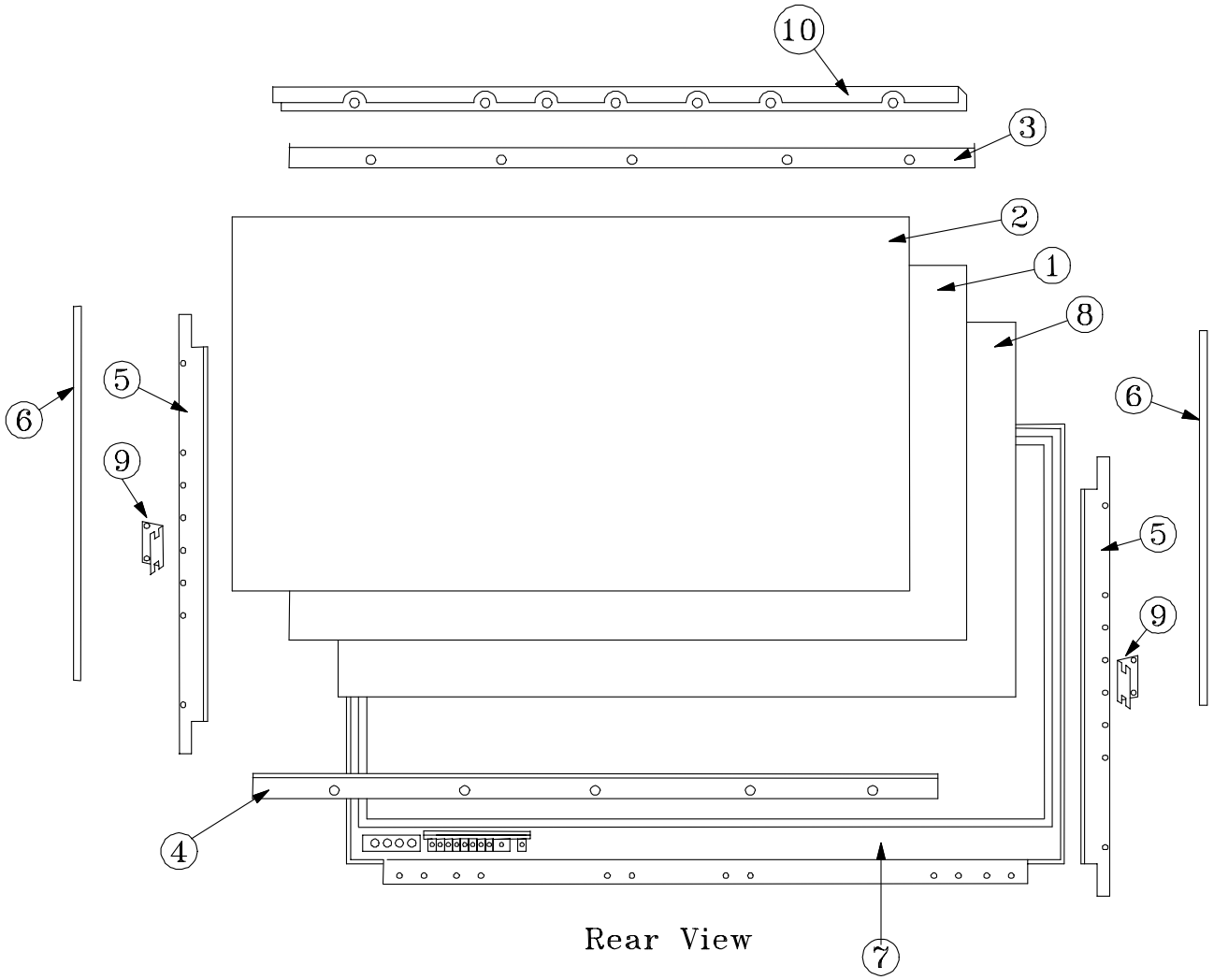

Figure 1: WS-48511

[#] Model Legend:
(1) WS-B55, (2) WS-48511, (3) WS-55511, (4) WS-55711, (5) WS-65511, (6) WS-65611, (7) WS-65711, (8) WS-65712, (9) WS-73711

SCREEN ASSEMBLY PARTS
WS-B55 & WS-55511 (Figure 2)

Ref #	Part #	Part Name & Description	[#]
(1)	491P103030	SCREEN-LENTICULAR - 55"	1&3
(2)	491P104030	LENS-FRESNEL - 55"	1&3
(3)	702A403020	CONTROL PANEL	1&3
(4)	622C063040	HOLDER-SCREEN-BOT	1&3
(5)	701B454010	FRAME SCREEN-TOP - 55"	1&3
(6)	701B457030	FRAME SCREEN-S - 55"	1&3
(7)	702A388030	CAP-CORNER-LEFT	1&3
(8)	702A388040	CAP-CORNER-RIGHT	1&3
(9)	760D627060	DIAMOND SHIELD - 55"	3
(9)	760D639020	DIAMOND SHIELD - 55"	1
(10)	622C060040	CLIP-SCREEN-TOP/BOT	1&3

WS-65511 (Figure 2)

Ref #	Part #	Part Name & Description	[#]
(1)	491P105030	SCREEN-LENTICULAR - 65W V21	5
(2)	491P106050	LENS-FRESNEL - 65W V21	5
(3)	702A393050	CONTROL PANEL	5
(4)	622C059050	HOLDER-SCREEN-BOT	5
(5)	701B454030	FRAME SCREEN-TOP - 65"	5
(6)	701B457040	FRAME SCREEN-S - 65"	5
(7)	702A388030	CAP-CORNER-LEFT	5
(8)	702A388040	CAP-CORNER-RIGHT	5
(9)	760D627070	DIAMOND SHIELD - 65"	5
(10)	622C060060	CLIP-SCREEN-TOP/BOT	5

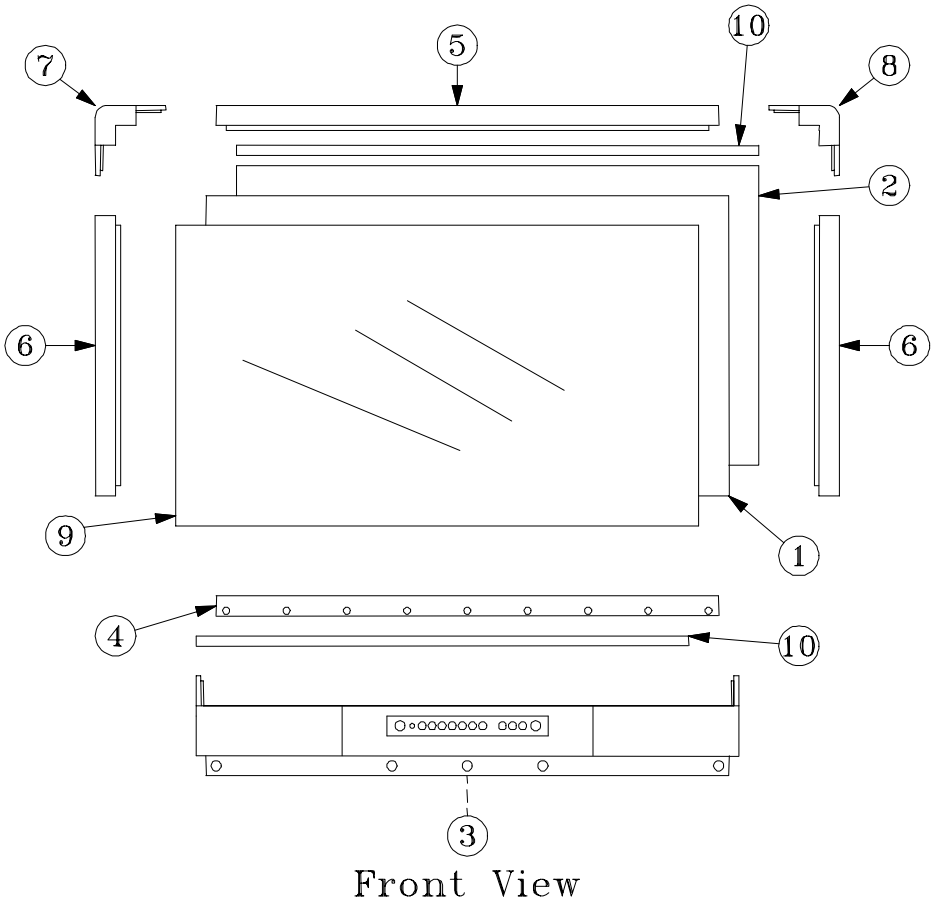

Figure 2: WS-B55 / WS-55511 / WS-65511

[#] Model Legend:
(1) WS-B55, (2) WS-48511, (3) WS-55511, (4) WS-55711, (5) WS-65511, (6) WS-65611, (7) WS-65711, (8) WS-65712, (9) WS-73711

Ref #	Part #	Part Name & Description	[#]
		SCREEN ASSEMBLY PARTS WS-65712 (Figure 3)	
(1)	491P105040	SCREEN-LENTICULAR - LENTI-6	8
(2)	491P106060	LENS-FRESNEL - FRESNEL-65W-	8
(3)	622C090010	CLIP-SHIELD - 65"	8
(4)	702A408010	CAP-CORNER - METAL	8
(5)	702A409010	CAP-CORNER-BOTTOM - METAL (RIGHT)	8
(6)	702A409020	CAP-CORNER-BOTTOM - METAL (LEFT)	8
(7)	760D635020	DIAMOND SHIELD	8
(8)	701B466010	FRAME-SIDE-AL - METAL	8
(9)	701B467010	FRAME-TOP-AL - METAL	8
(10)	701B468010	FRAME-BOTTOM-AL - METAL	8

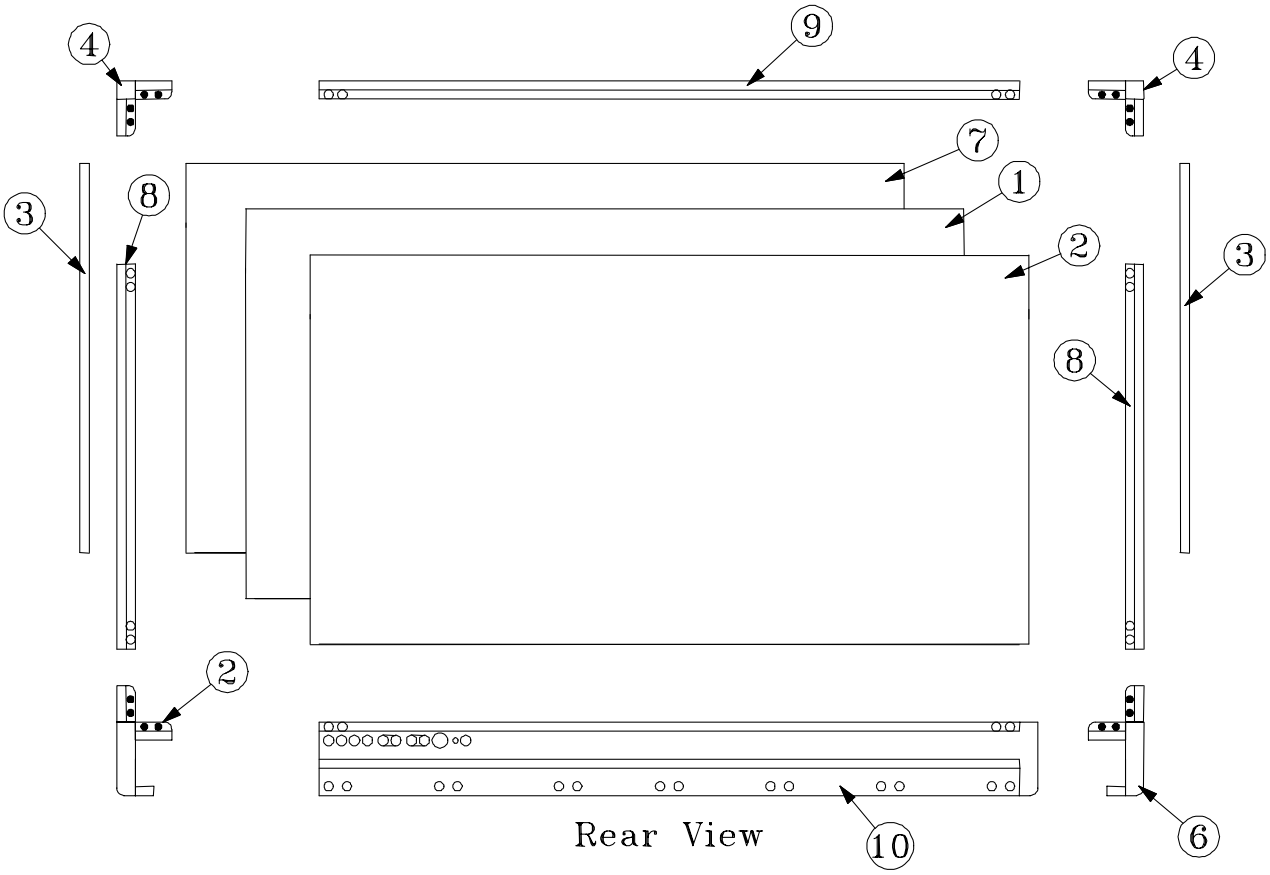

Figure 3: WS-65712

[#] Model Legend:
(1) WS-B55, (2) WS-48511, (3) WS-55511, (4) WS-55711, (5) WS-65511, (6) WS-65611, (7) WS-65711, (8) WS-65712, (9) WS-73711

SCREEN ASSEMBLY PARTS

WS-55711 (Figure 4)

Ref #	Part #	Part Name & Description	[#]
(1)	491P103030	SCREEN-LENTICULAR - 55"	4
(2)	491P104030	LENS-FRESNEL - 55"	4
(3)	711C029040	FRAME-SCREEN-TOP - 55"	4
(4)	711C029050	FRAME-SCREEN-SIDES - 55"	4
(5)	711C029060	FRAME-SCREEN-BOTTOM - 55"	4
(6)	760D635010	DIAMOND SHIELD	4
(7)	768C065010	CAP-CORNER	4
(8)	622D746080	CLIP-SCREEN-SIDES	4

WS-65611 (Figure 4)

Ref #	Part #	Part Name & Description	[#]
(1)	491P105030	SCREEN-LENTICULAR - 65W V21	6
(2)	491P106050	LENS-FRESNEL - 65W V21	6
(3&5)	701B429020	SCREEN-FRAME-TOP/BOT - 65"	6
(4)	701B430020	SCREEN-FRAME-SIDE - 65"	6
(6)	760D627070	DIAMOND SHIELD - 65"	6
(7)	702A396010	CAP-CORNERS	6
(9)	622C071020	CLIP-SCREEN-TOP/BOT	6

WS-65711 (Figure 4)

Ref #	Part #	Part Name & Description	[#]
(1)	491P105030	SCREEN-LENTICULAR - 65W V21	7
(2)	491P106050	LENS-FRESNEL - 65W V21	7
(3)	711C026040	FRAME-SCREEN-TOP - 65"	7
(4)	711C026050	FRAME-SCREEN-SIDES - 65"	7
(5)	711C026060	FRAME-SCREEN-BOTTOM - 65"	7
(6)	760D635020	DIAMOND SHIELD	7
(7)	768C065010	CAP-CORNER	7
(8)	622D746020	CLIP-SCREEN-SIDES	7

WS-73711 (Figure 4)

Ref #	Part #	Part Name & Description	[#]
(1)	491P085030	SCREEN-LENTICULAR - 73"	9
(2)	491P086030	LENS-FRESNEL - 73"	9
(3)	711C029070	FRAME-SCREEN-TOP - 73"	9
(4)	711C029080	FRAME-SCREEN-SIDES - 73"	9
(5)	711C029090	FRAME-SCREEN-BOTTOM - 73"	9
(6)	760D635030	DIAMOND SHIELD - 73"	9
(7)	768C065010	CAP-CORNER	9
(8)	622D746010	CLIP-SCREEN-SIDES	9

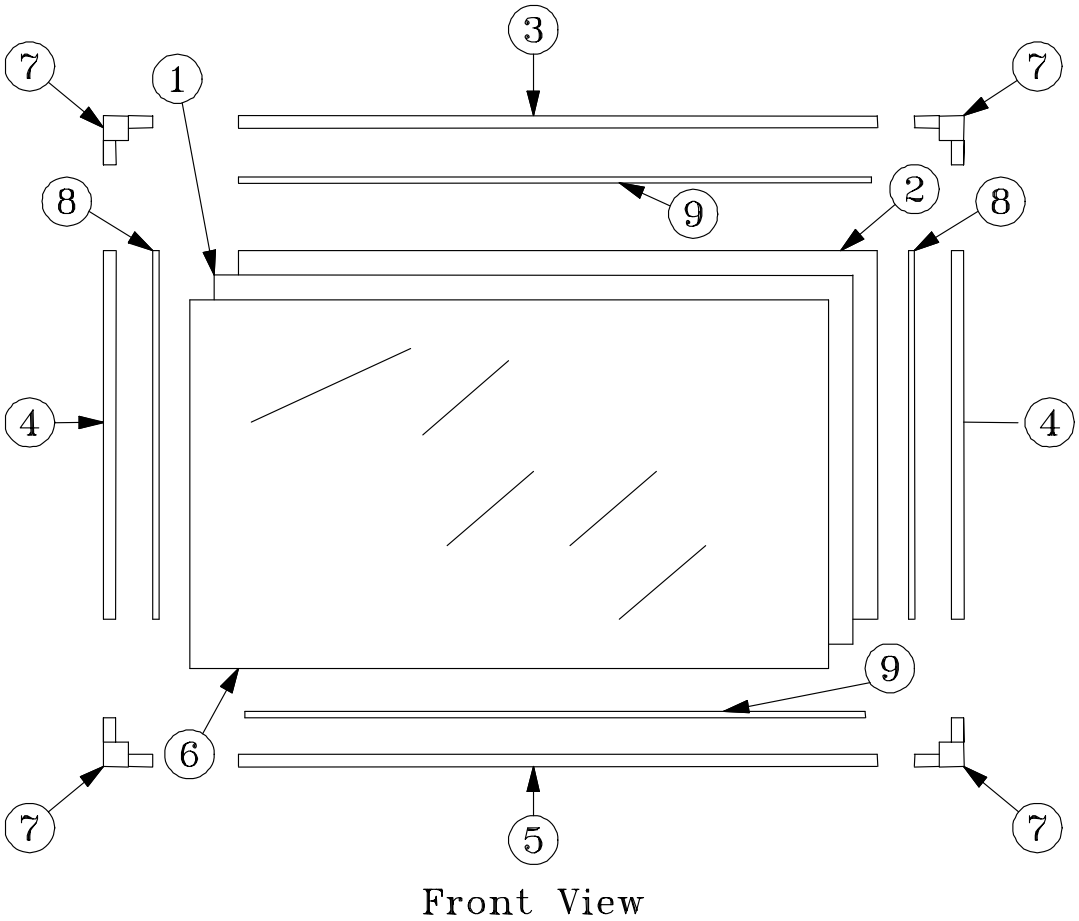

Figure 4: WS-55711 / WS-65611 / WS65711 / WS-73711

STANDBY SUPPLIES REGULATOR

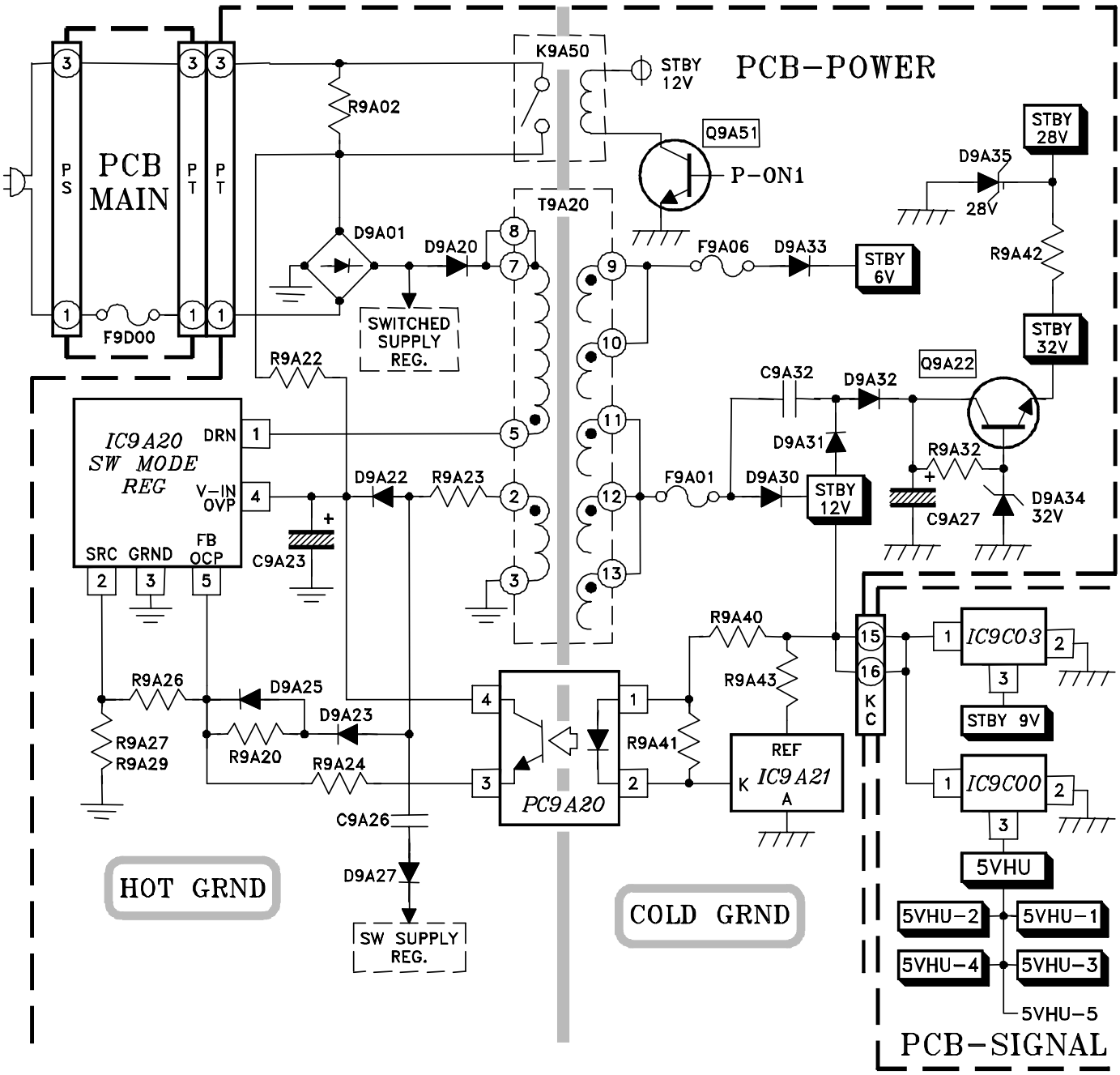

SWITCHED SUPPLIES REGULATOR

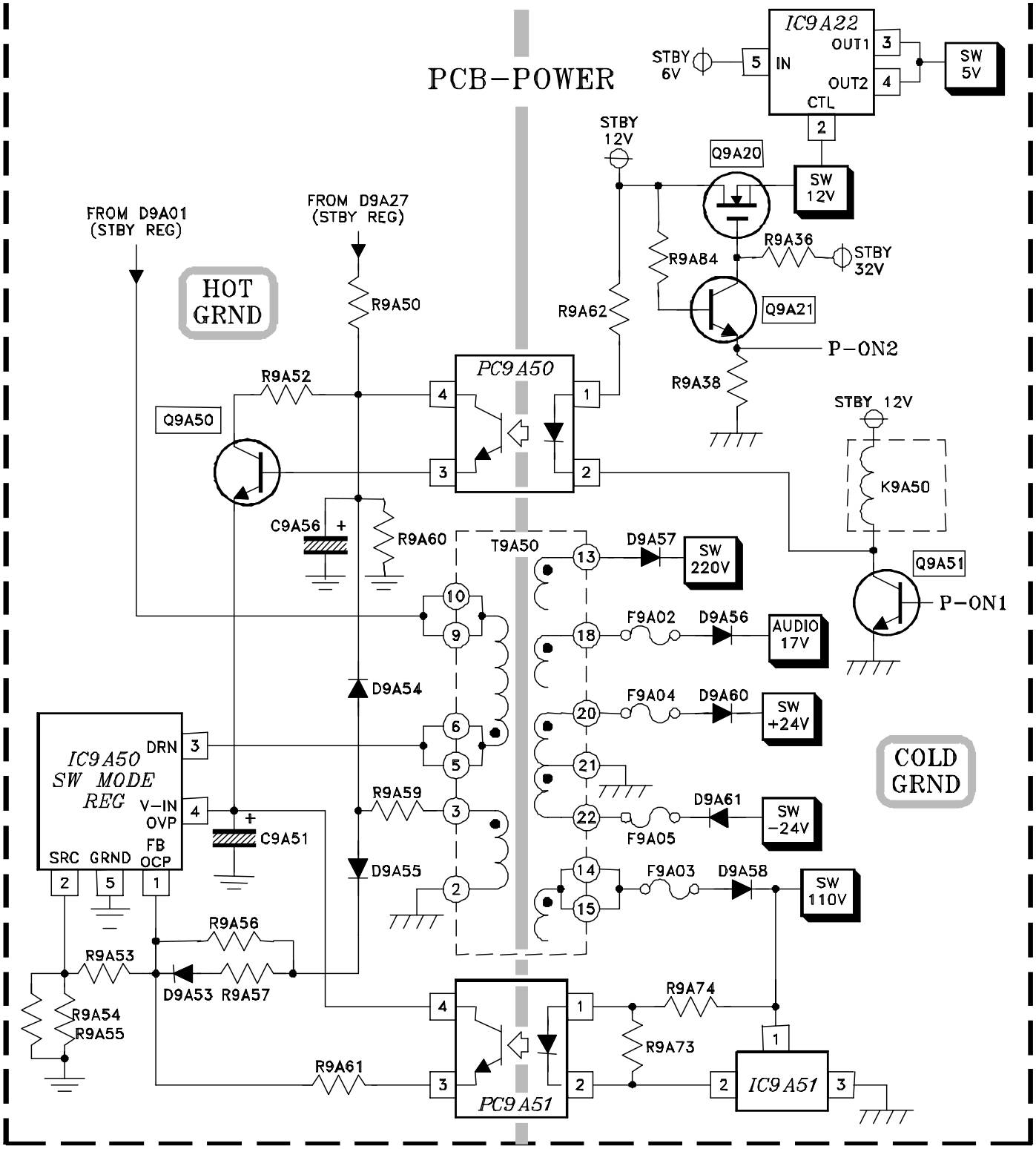

DM POWER SUPPLY

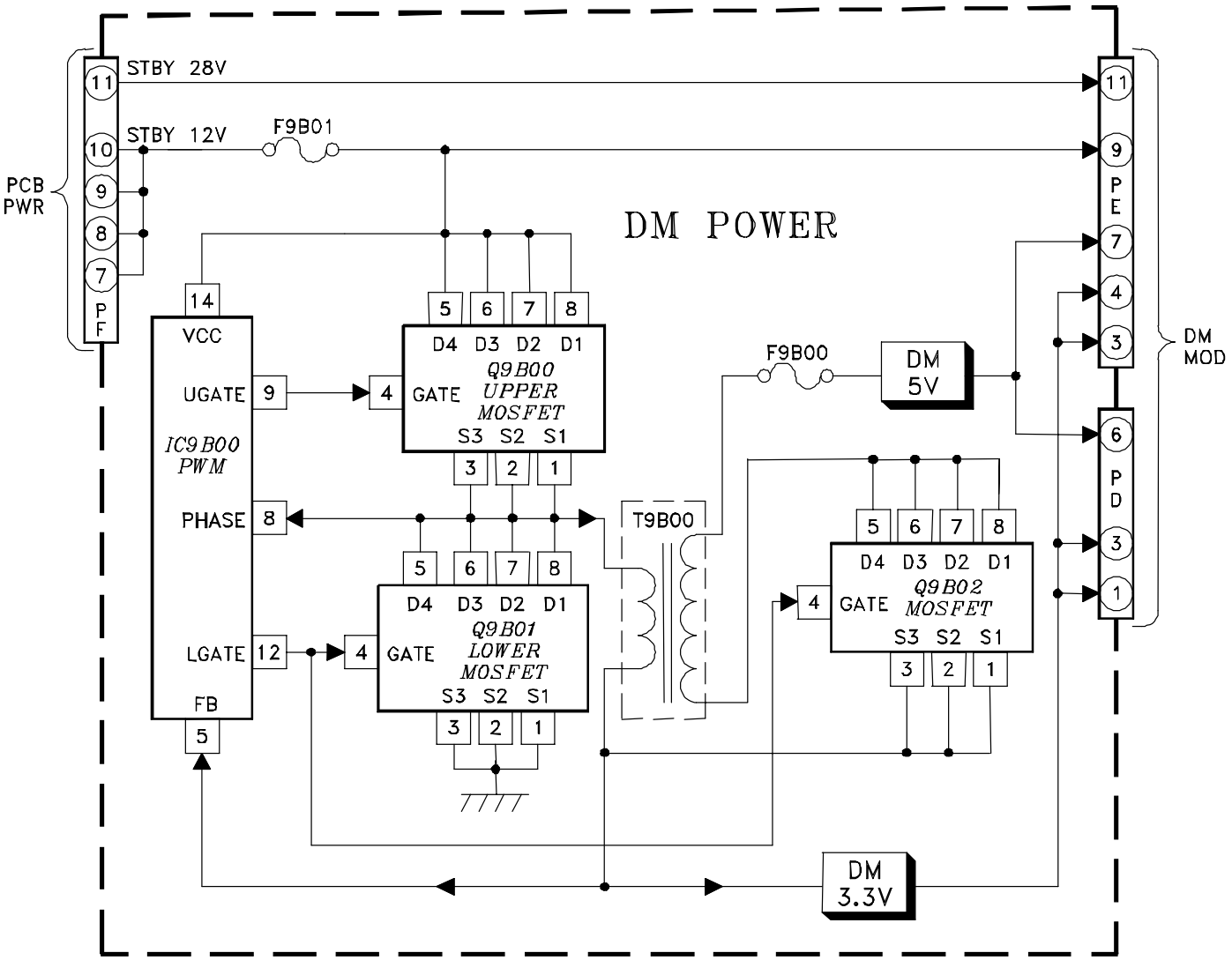

VIDEO/COLOR A/V SWITCH CIRCUIT

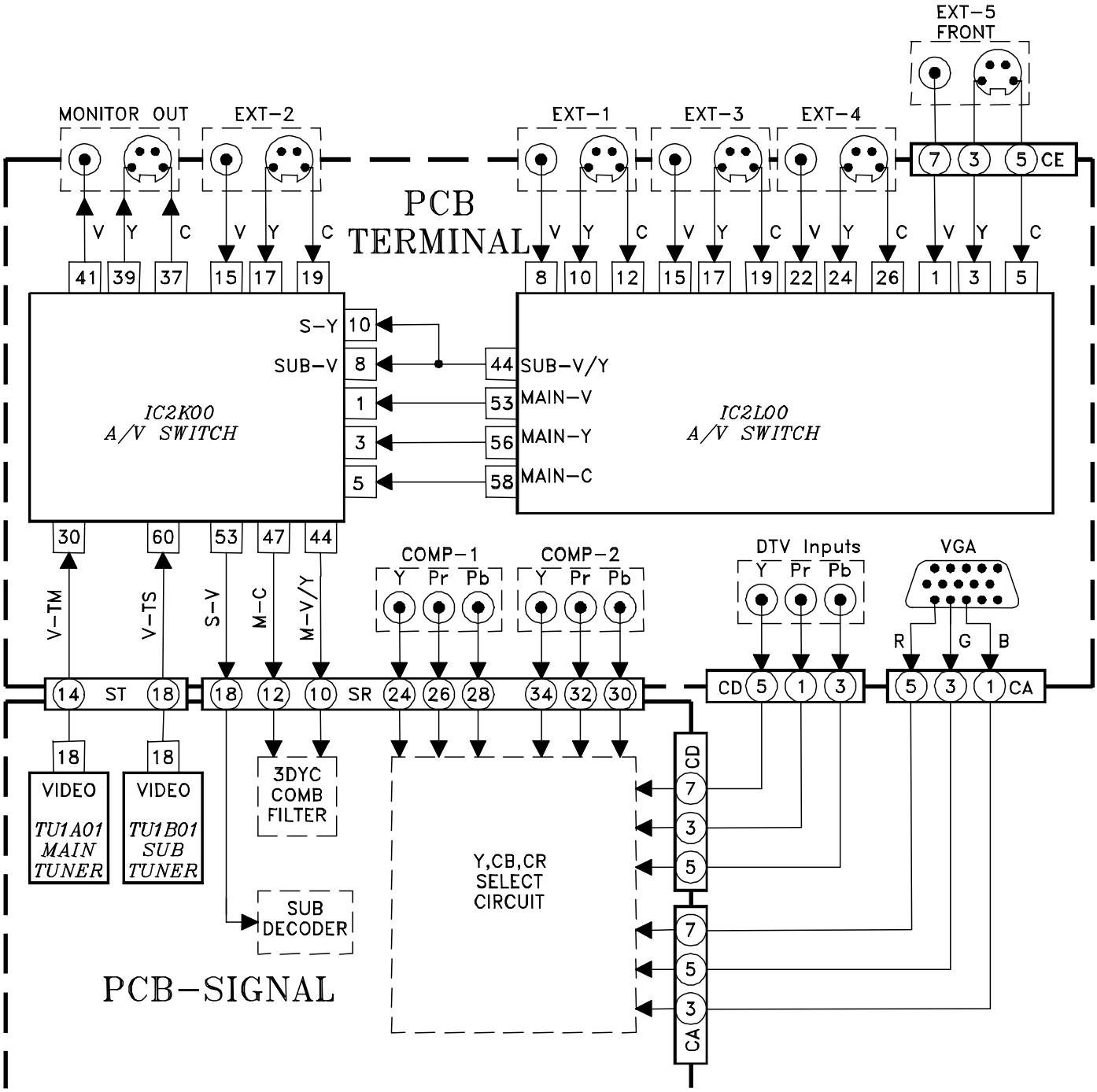

PCB-SIGNAL Y/C PATH

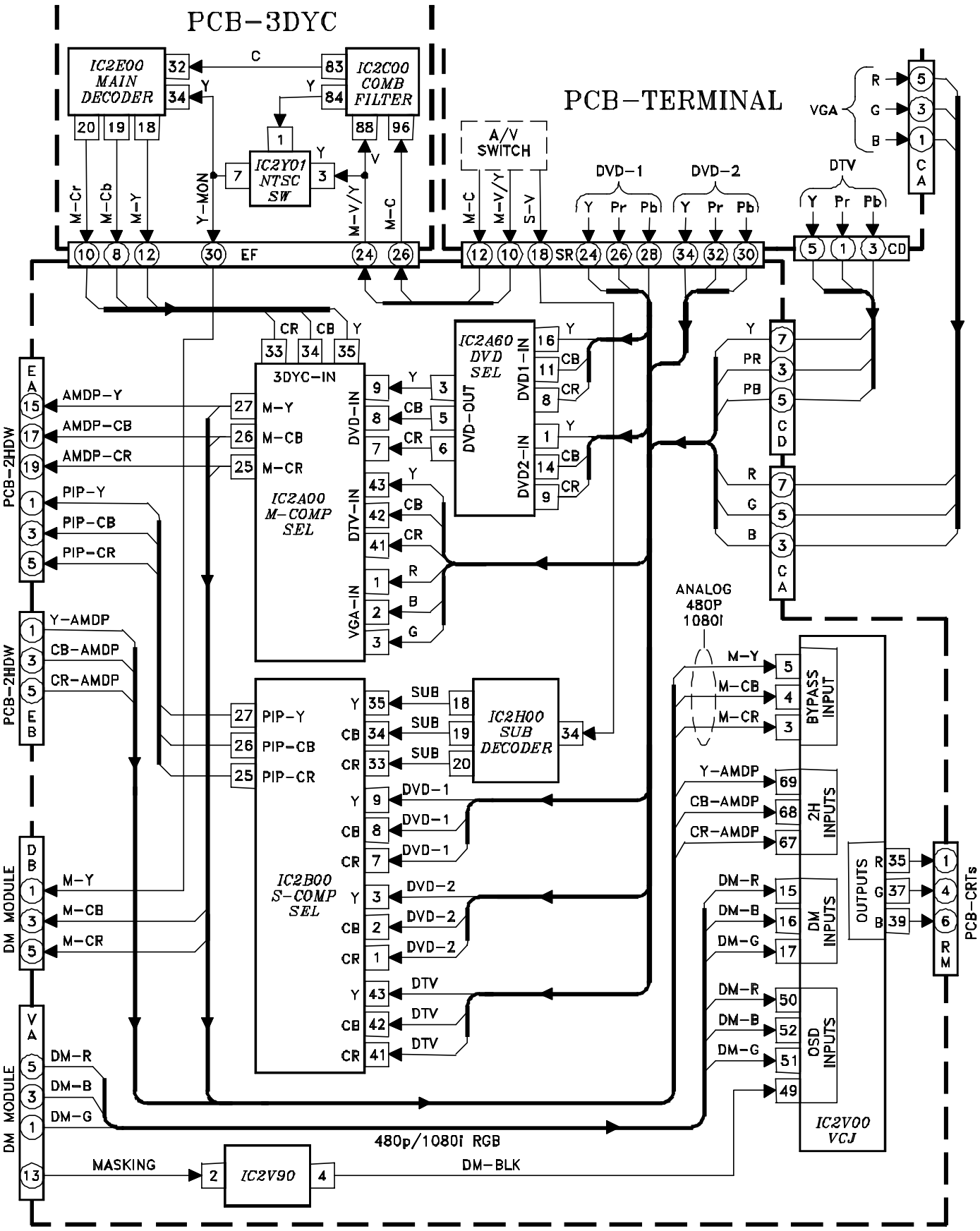

SYNC PATH

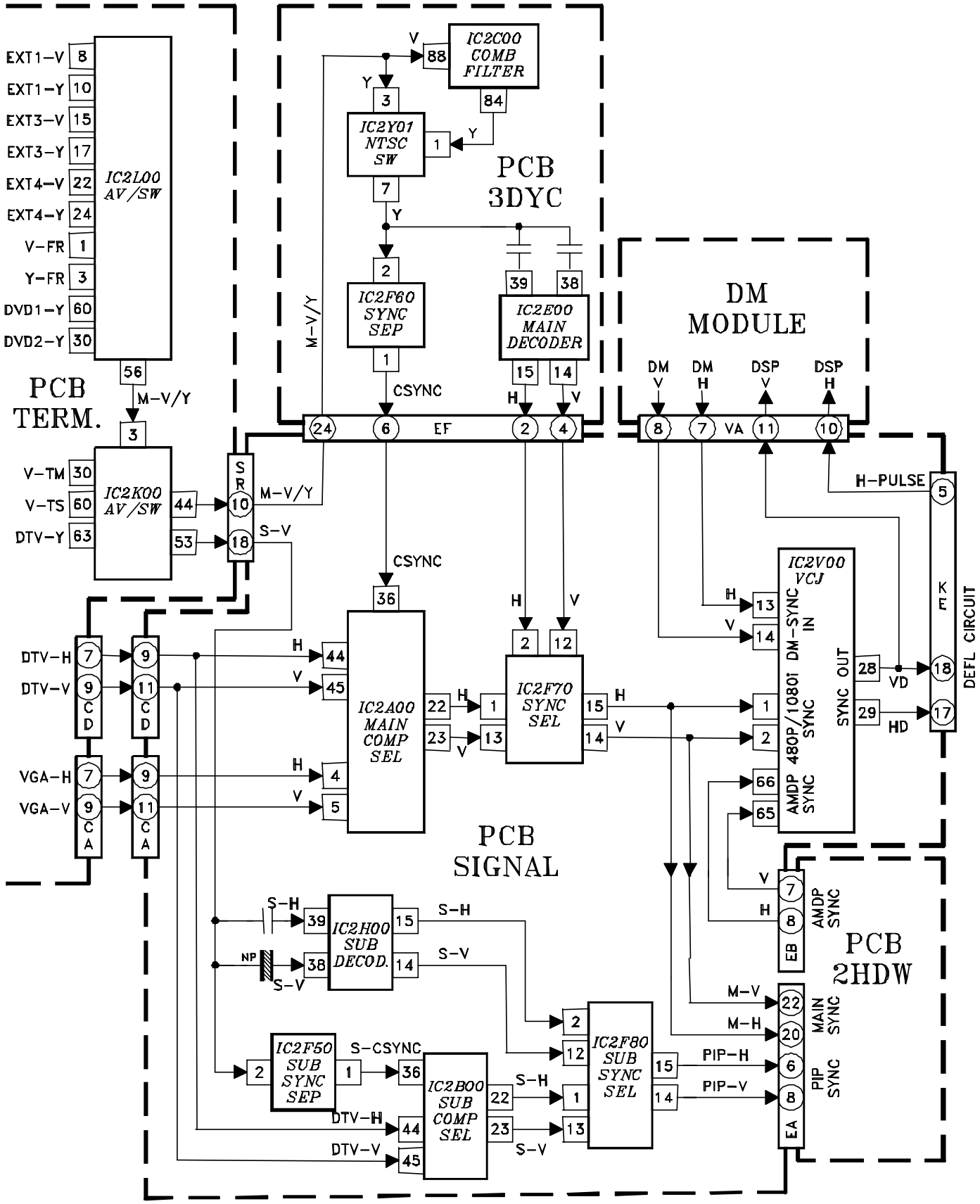
PCB TERM.
IC2L00 AV/SW
EXT1-V
EXT1-Y
EXT3-V
EXT3-Y
EXT4-V
EXT4-Y
V-FR
Y-FR
DVD1-Y
DVD2-Y
M-V/Y
IC2K00 AV/SW
V-TM
V-TS
DTV-Y
S-V
PCB 3DYC
IC2C00 COMB FILTER
IC2Y01 NTSC SW
IC2F60 SYNC SEP
IC2E00 MAIN DECODER
CSYNC
EF
DM MODULE
DM V
DM H
DSP V
DSP H
VA
H-PULSE
DEFL CIRCUIT
IC2V00 VCJ
DM-SYNC IN
480P/1080I SYNC
AMDP SYNC
SYNC OUT
VD
HD
PCB SIGNAL
IC2A00 MAIN COMP SEL
IC2F70 SYNC SEL
DTV-H
DTV-V
VGA-H
VGA-V
IC2H00 SUB DECOD.
S-H
S-V
NP
IC2F50 SUB SYNC SEP
S-CSYNC
IC2B00 SUB COMP SEL
IC2F80 SUB SYNC SEL
PCB 2HDW
AMDP SYNC
MAIN SYNC
PIP SYNC
M-V
M-H
PIP-H
PIP-V

DEFLECTION CIRCUIT

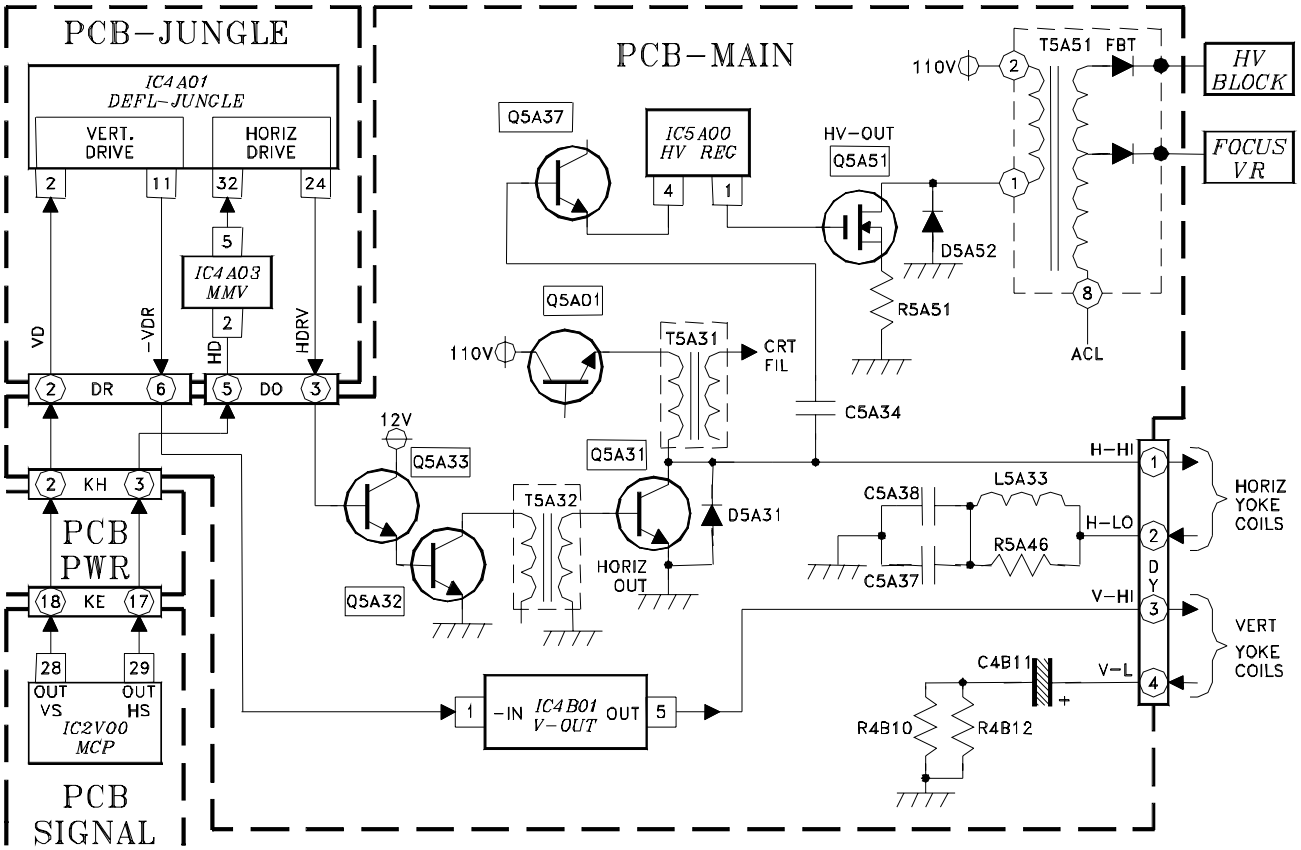

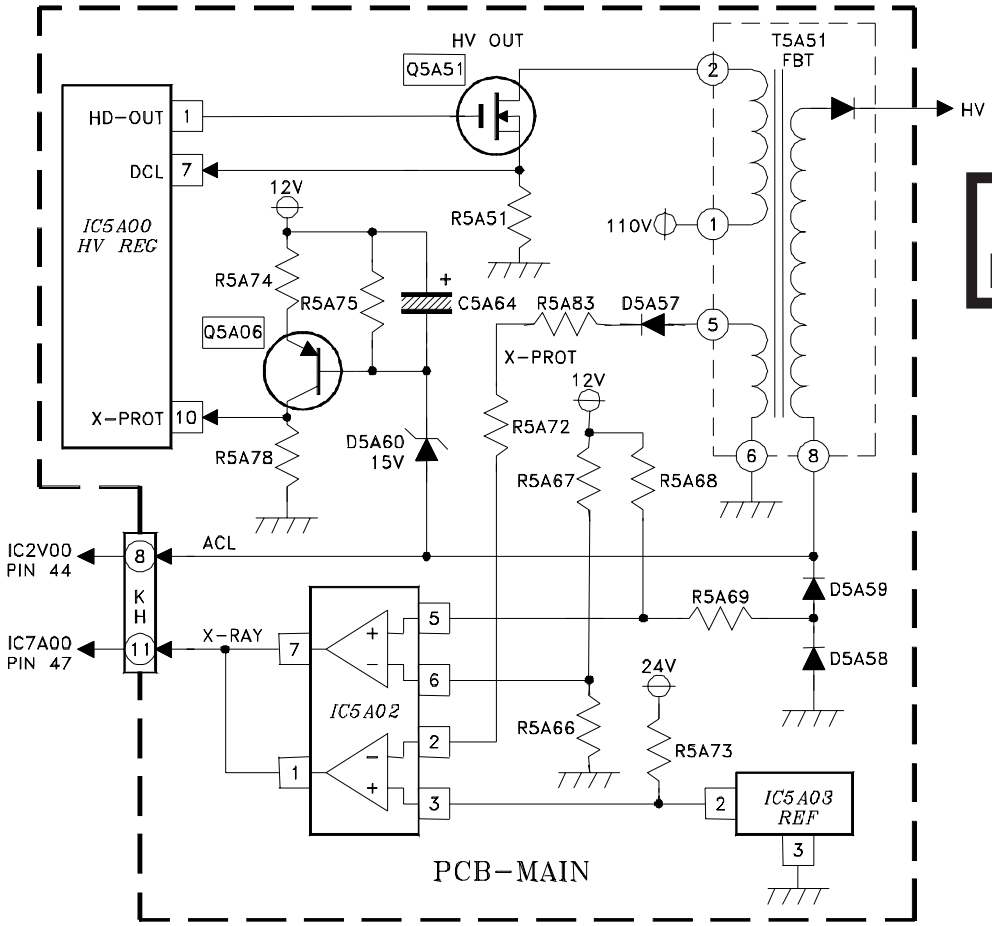

X-RAY PROTECT

SOUND CIRCUIT

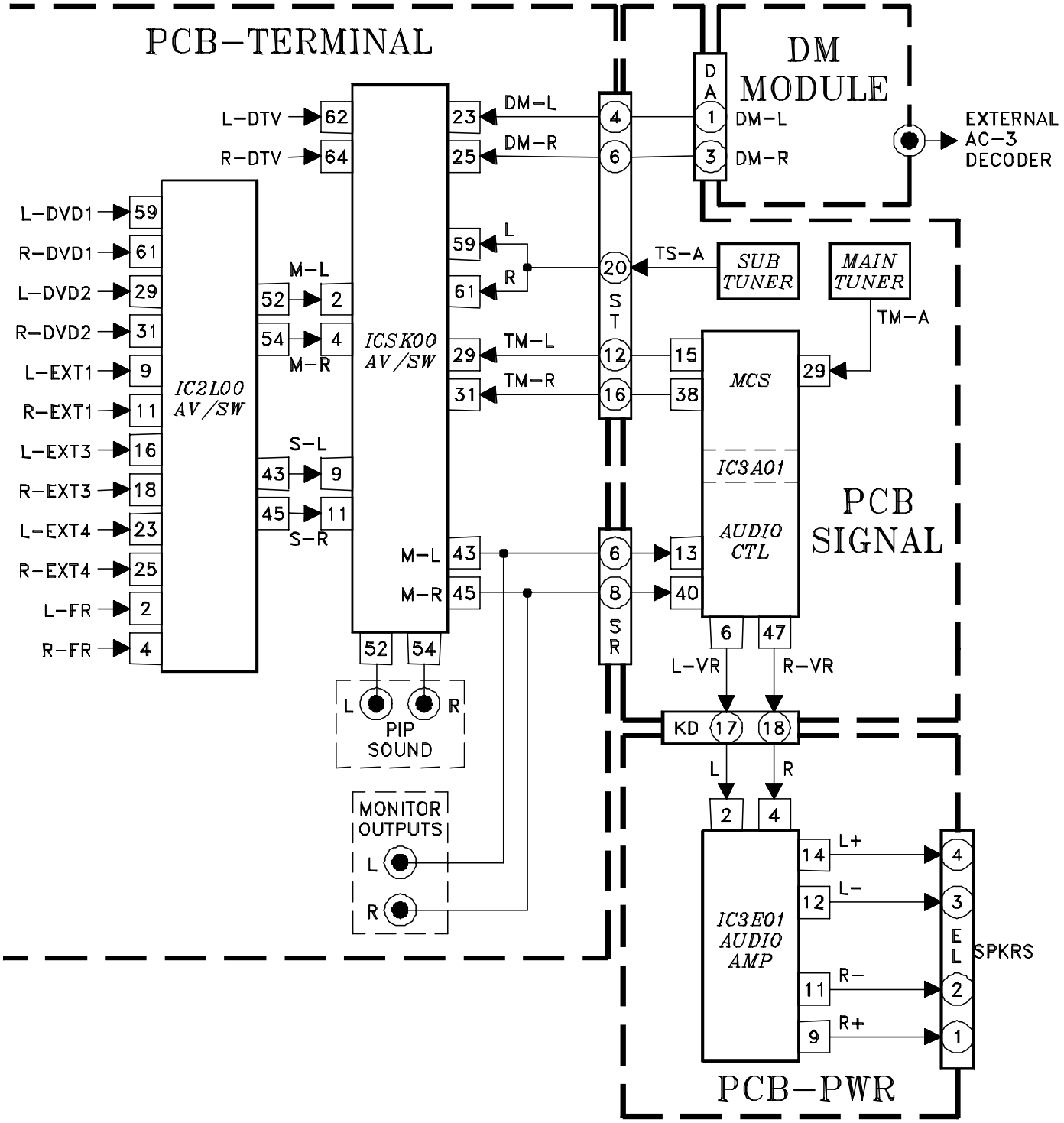

CONVERGENCE CIRCUIT

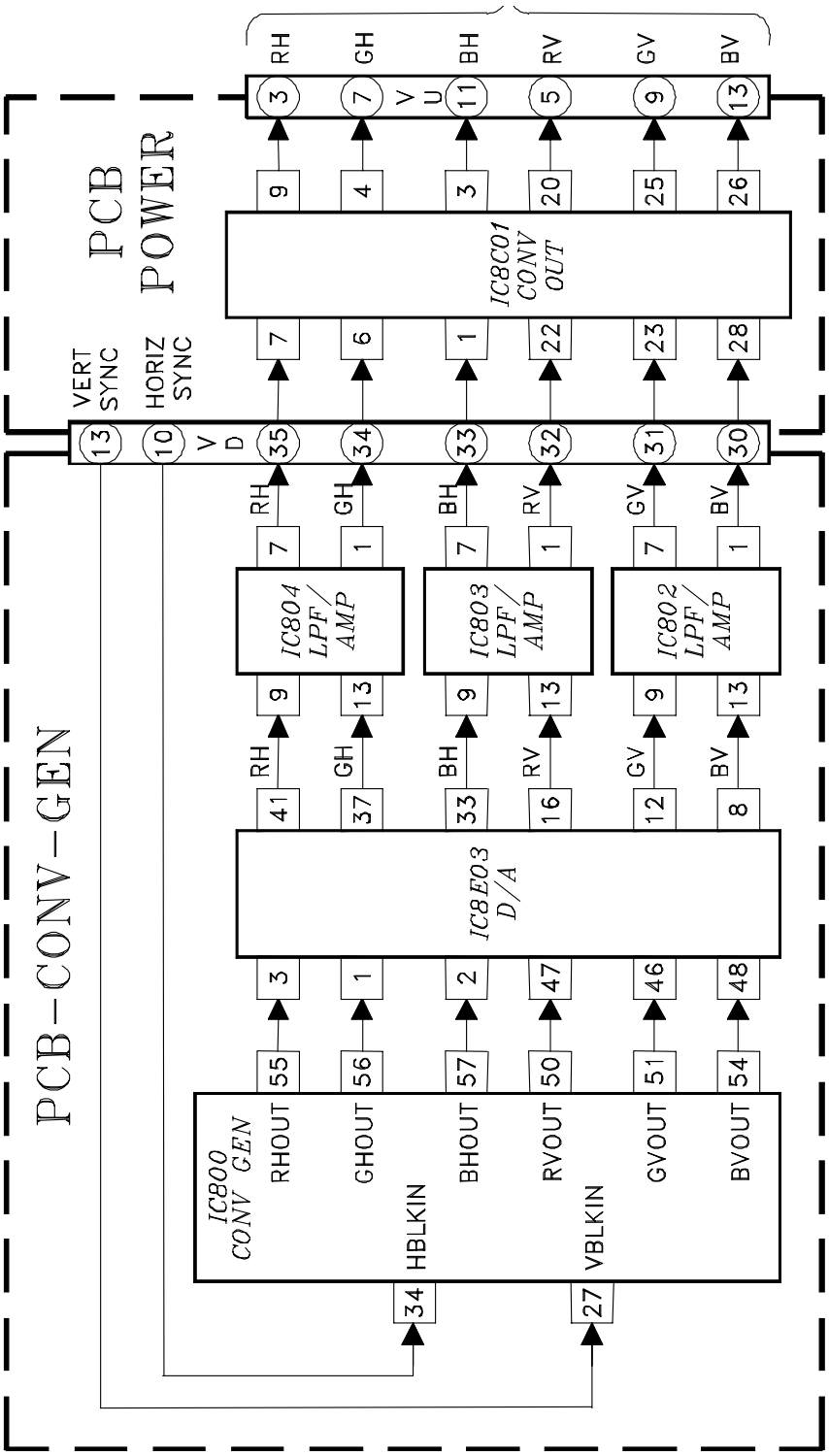

CONTROL CIRCUIT

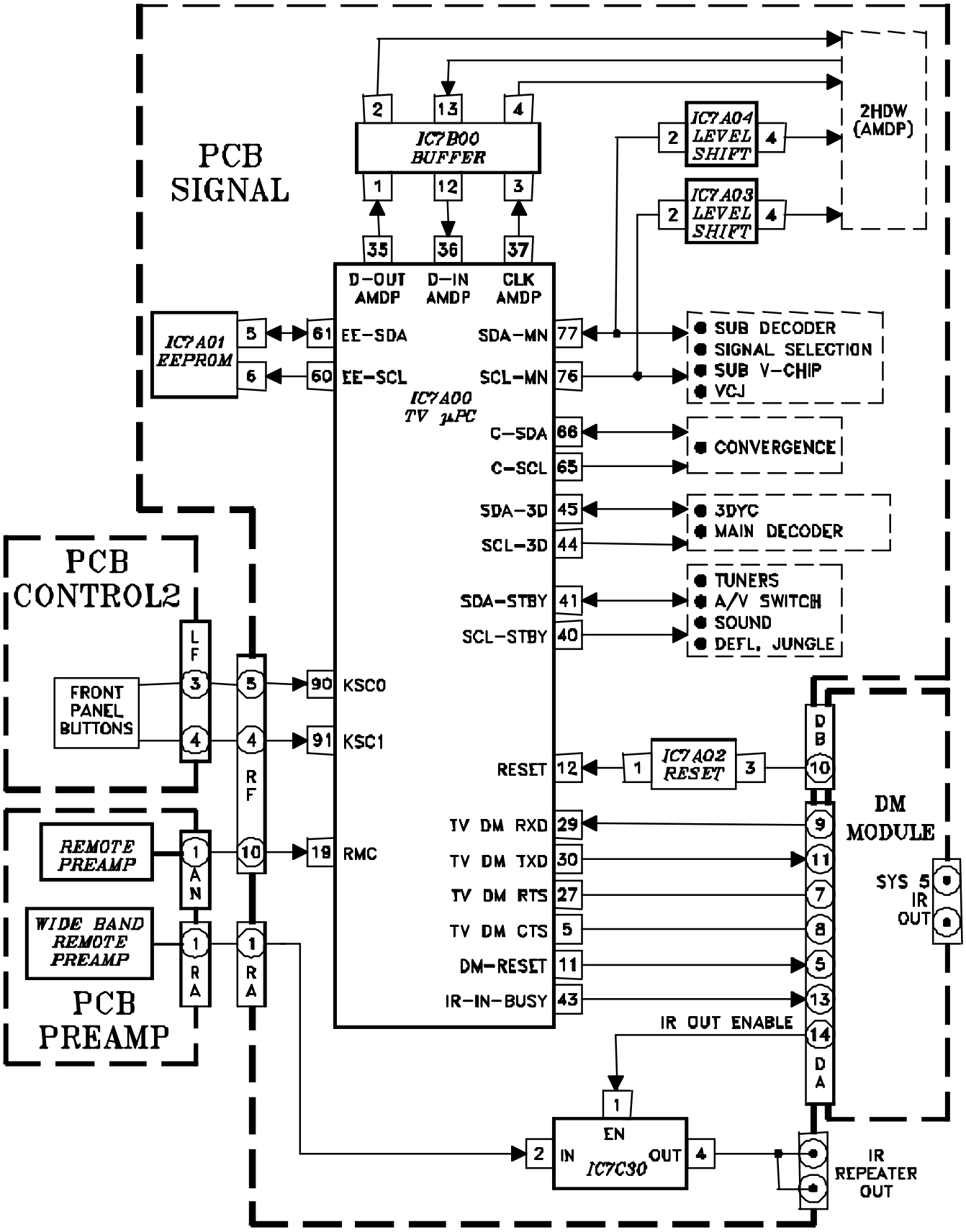

2002

MITSUBISHI ELECTRIC

Service Manual

PROJECTION TELEVISION
V21 / V21+ / V21++ CHASSIS

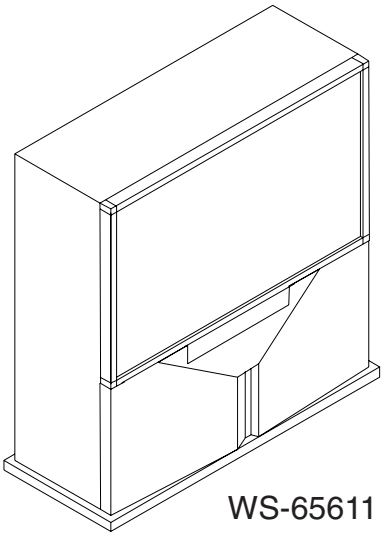

WS-65611

V21 MODELS	V21+ MODELS	V21++ MODELS
WS-48511	WS-65611	WS-55711
WS-55511		WS-65711
WS-65511		WS-65712
WS-B55		WS-73711

CAUTION:
Before servicing this chassis, it is important that the service person read the "SAFETY PRECAUTIONS" and "PRODUCT SAFETY NOTICE" contained in Part 1 of this manual.

PART 2
SCHEMATIC DIAGRAMS

CONTENTS **Page**

Overall PCB Block Diagram 1
PCB-MAIN 2
PCB-POWER 3
PCB-POWER 4
PCB-SIGNAL-1 (AV I/O) 5
PCB-SIGNAL-2 (MICRO) 6
PCB-SIGNAL-3 (VIDEO/CHROMA) 7
PCB-3DYC 8
PCBs-CONV GEN / JUNGLE 9
PCBs-CONTROL / CRT / CROSSOVER / DBF / DM POWER / FRONT / PREAMP / SVM 10
PCB-2HDW-1 11
PCB-2HDW-2 12
PCB-2HDW-3 13

Refer to PART 1 for:

- Specifications
- Safety Precautions
- Disassembly
- CRT Replacement
- Electrical Adjustments
- Parts List
- Block Diagrams

MITSUBISHI DIGITAL ELECTRONICS AMERICA, INC.
9351 Jeronimo Road, Irvine, CA 92618-1904

Copyright © 2002 Mitsubishi Digital Electronics America, Inc.
All Rights Reserved

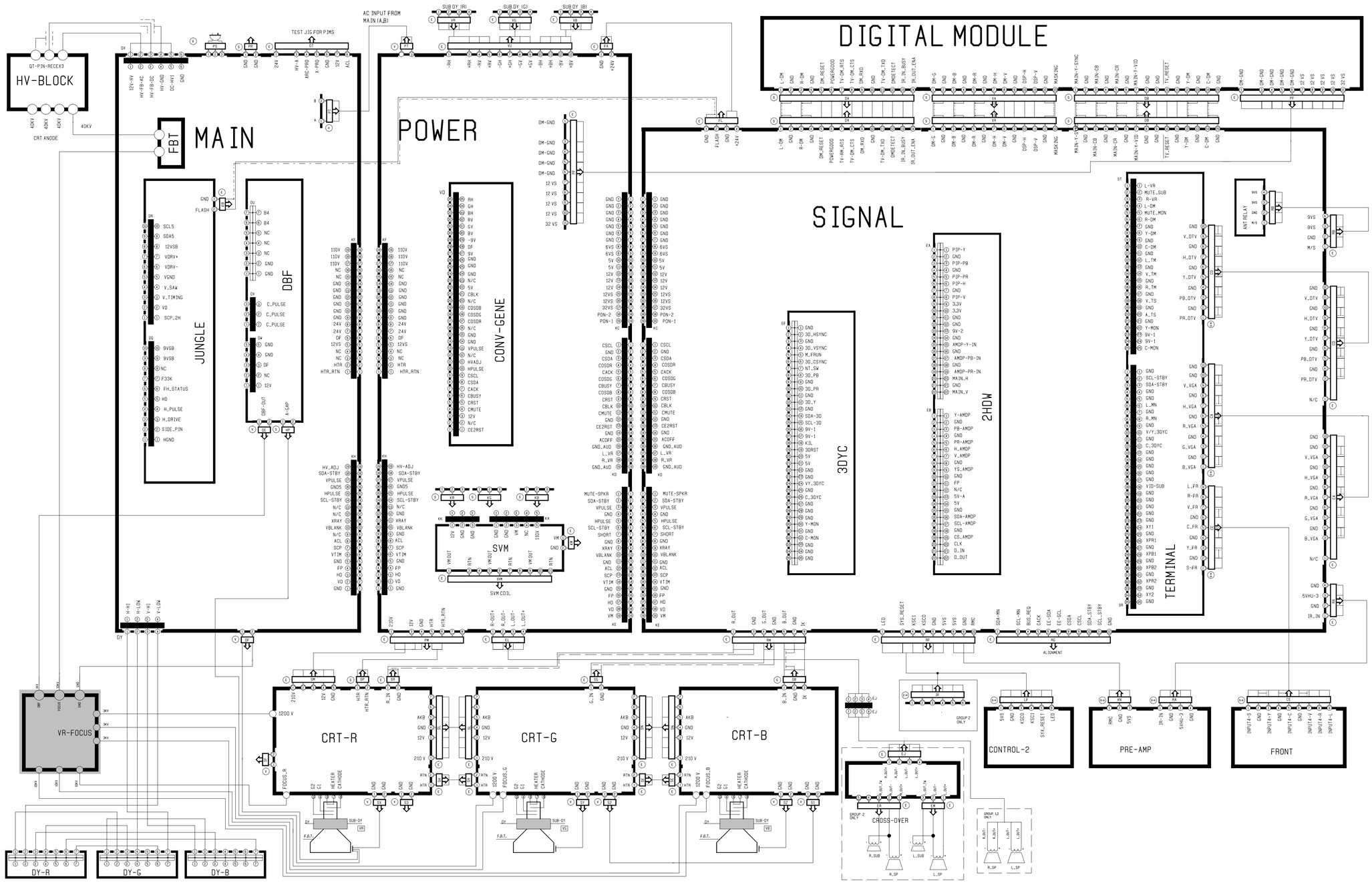

NOTES

1. DC voltages were measured from points indicated to the circuit ground with a high-Z voltmeter.
2. Waveforms were taken with standard color bar signal
3. TP13, etc. show Test Points
4. CAPACITORS

Value		Not indicated	PF, for numbers more than 1 μF, for numbers less than 1
Dielectric Strength		Not indicated : 50V	
Tolerance		Not indicated = ±10% G = ±2% P = +100% Q = +30% C = ±0.25PF J = ±5% -0% -10% D = ±0.5PF K = ±10% Z = +80% T = +20% F = ±1PF M = ±20% -20% -0% G = ±2PF	No tolerance is indicated for electrolytic capacitors and ± 20%
Type	I Parts except for chips	Not indicated	: Ceramic capacitor
		MF	: Polyester capacitor
		PP	: Polypropylene film capacitor
		ALM	: Aluminus electrolytic capacitor
		TF	: Twin film capacitor
		SC	: Semiconductor Ceramic capacitor
		MP	: Metalized paper
		MPF	: Metalized plastic film capacitor
		MMF	: Metalized polyester capacitor
		MF.PP	: Polyester polypropylene film capacitor
		PS	: Styrol capacitor
		TAN or TANT	: Tantalum capacitor
			: Electrolytic capacitor
		NP	: Non polarized electrolytic capacitor
	II Chips	Not indicated	: Ceramic capacitor chip
			: Electrolytic capacitor
		NP	: Non polarized electrolytic capacitor chip
Characteristic (only ceramic capacitor)		Not indicated CH, SL, etc.	: F or B (high dielectric percentage) : Temperature compensating types

5. RESISTORS

Value		Not indicated = Ohm K = 1,000 Ohm M = 1,000,000 Ohm	
Wattage	Parts except for chips	Not indicated = 1/4W or 1/8W	
	Chips	Not indicated = 1/8W	
Tolerance		Not indicated = ±5% D = ±0.5% J = ±5% F = ±1% K = ±10%	
Type	I Parts except for chips	Not indicated	: Carbon resistor
		S	: Fixed composition resistor
		MB	: Metal oxide film resistor (type B)
		CE	: Cemented resistor
		W	: Wire wound resistor
		M	: Metal film resistor
		MPC	: Metal plate cement resistor
		ML	: Metal liner resistor
	II Chip	Not indicated	: Chip resistor

6. This is a basic schematic diagram. Some sets may be subject to modification according to engineering improvement.

SHADED COMPONENTS HAVE SPECIAL CHARACTERISTICS IMPORTANT TO SAFETY. BEFORE REPLACING ANY OF THESE COMPONENTS READ CAREFULLY THE PRODUCT SAFETY NOTICE IN THE SERVICE MANUAL. DON'T DEGRADE THE SAFETY OF THE RECEIVERS THROUGH IMPROPER SERVICING.

SERVICE TECHNICIAN WARNING:
X-RADIATION PRECAUTION
THIS PRODUCT INCLUDES CRITICAL ELECTRICAL AND MECHANICAL PARTS ESSENTIAL FOR X-RADIATION PROTECTION.
TO AVOID POSSIBLE EXPOSURE TO X-RADIATION TAKE X-RADIATION PROTECTIVE MEASURES FOR PERSONNEL DURING SERVICING.
SEE SERVICE INSTRUCTIONS FOR SPECIFIED REPLACEMENT PARTS AND SERVICE ADJUSTMENTS.

GROUP	MODEL			
1	WS-55511	WS-65511	WT-4851I	
2	WS-55611			
3	WS-55711	WS-65711	WS-65712	WS-855
4	WS-55711			

CONTENTS

PG.1 BLOCK DIAGRAM
PG.2 MAIN
PG.3 POWER
PG.4 TERMINAL
PG.5 SIGNAL-1 (AV I/O)
PG.6 SIGNAL-2 (MICRO)
PG.7 SIGNAL-3 (VIDEO/CHROMA)
PG.8 3DYC
PG.9 CONV GEN/JUNGLE
PG.10 CRT/CONTROL/FRONT/PREAMP/DMPOWER
PG.11 DOUBLER-1 (IN)
PG.12 DOUBLER-2 (MAIN)
PG.13 DOUBLER-3 (OUT)

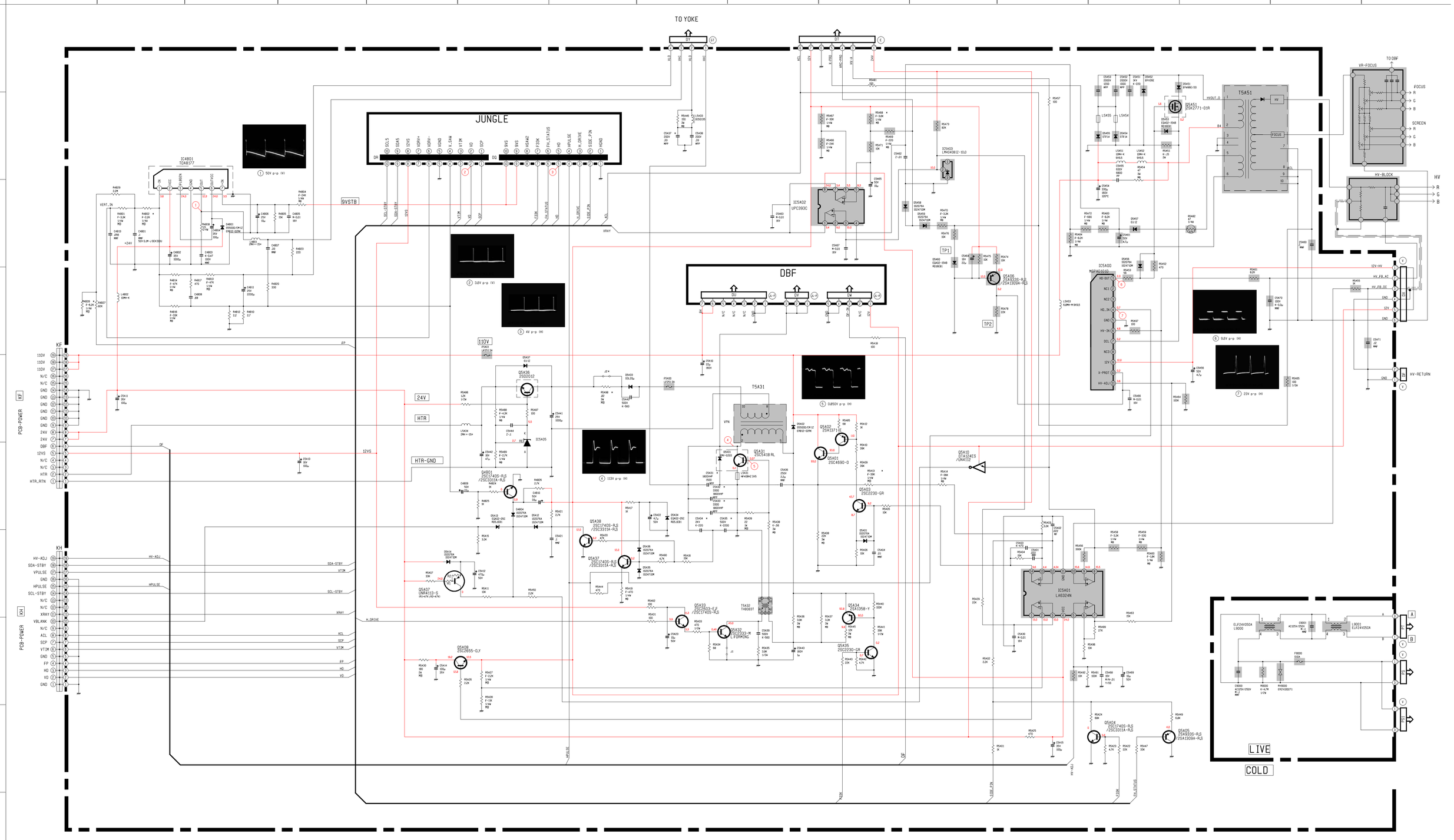

GROUP	MODEL				
1	WS-55611	WS-65511	WT-48511		
2	WS-55711				
3	WS-65711	WS-85711	WS-65712	WS-855	
4	WS-73711				

CONTENTS

PG.1.... BLOCK DIAGRAM
PG.2.... MAIN
PG.3.... POWER
PG.4.... TERMINAL
PG.5.... SIGNAL-1 (AV I/O)
PG.6.... SIGNAL-2 (MICRO)
PG.7.... SIGNAL-3 (VIDEO/CHROMA)
PG.8.... 3DYC
PG.9.... CONV GEN/JUNGLE
PG.10.. CRT/CONTROL/FRONT/PREAMP/DM POWER
PG.11.. DOUBLER-1 (IN)
PG.12.. DOUBLER-2 (MAIN)
PG.13.. DOUBLER-3 (OUT)

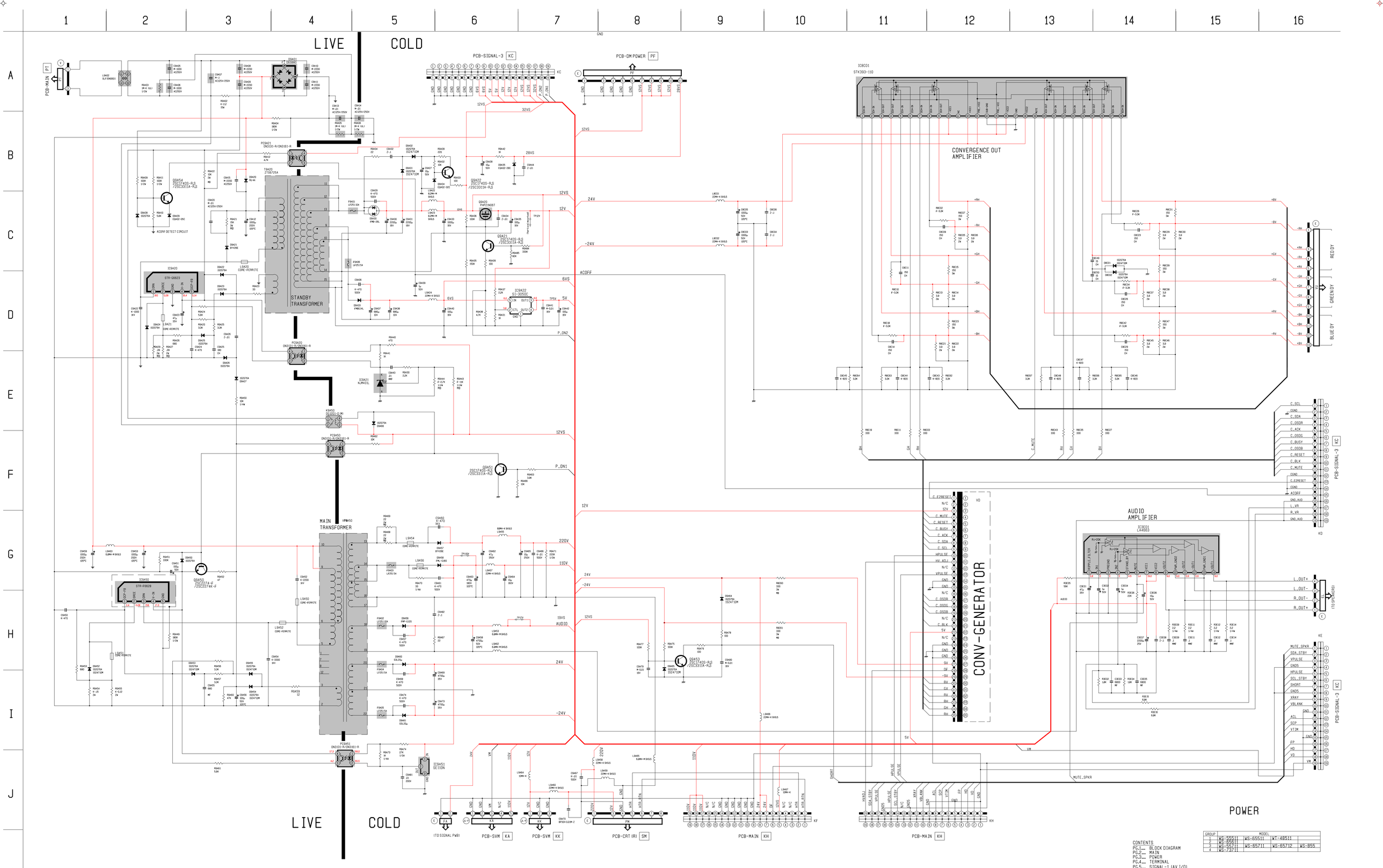

GROUP	MODEL				
1	WS-55611	WS-65511	WT-48511		
2	WS-55711				
3	WS-65711	WS-85711	WS-65712	WS-855	
4	WS-75711				

CONTENTS

PG.1..... BLOCK DIAGRAM
PG.2..... MAIN
PG.3..... POWER
PG.4..... TERMINAL
PG.5..... SIGNAL-1 (AV I/O)
PG.6..... SIGNAL-2 (MICRO)
PG.7..... SIGNAL-3 (VIDEO/CHROMA)
PG.8..... 3DYC
PG.9..... CONV GEN/JUNGLE
PG.10.... CRT/CONTROL/FRONT/PREAMP/DM POWER
PG.11.... DOUBLER-1 (IN)
PG.12.... DOUBLER-2 (MAIN)
PG.13.... DOUBLER-3 (OUT)

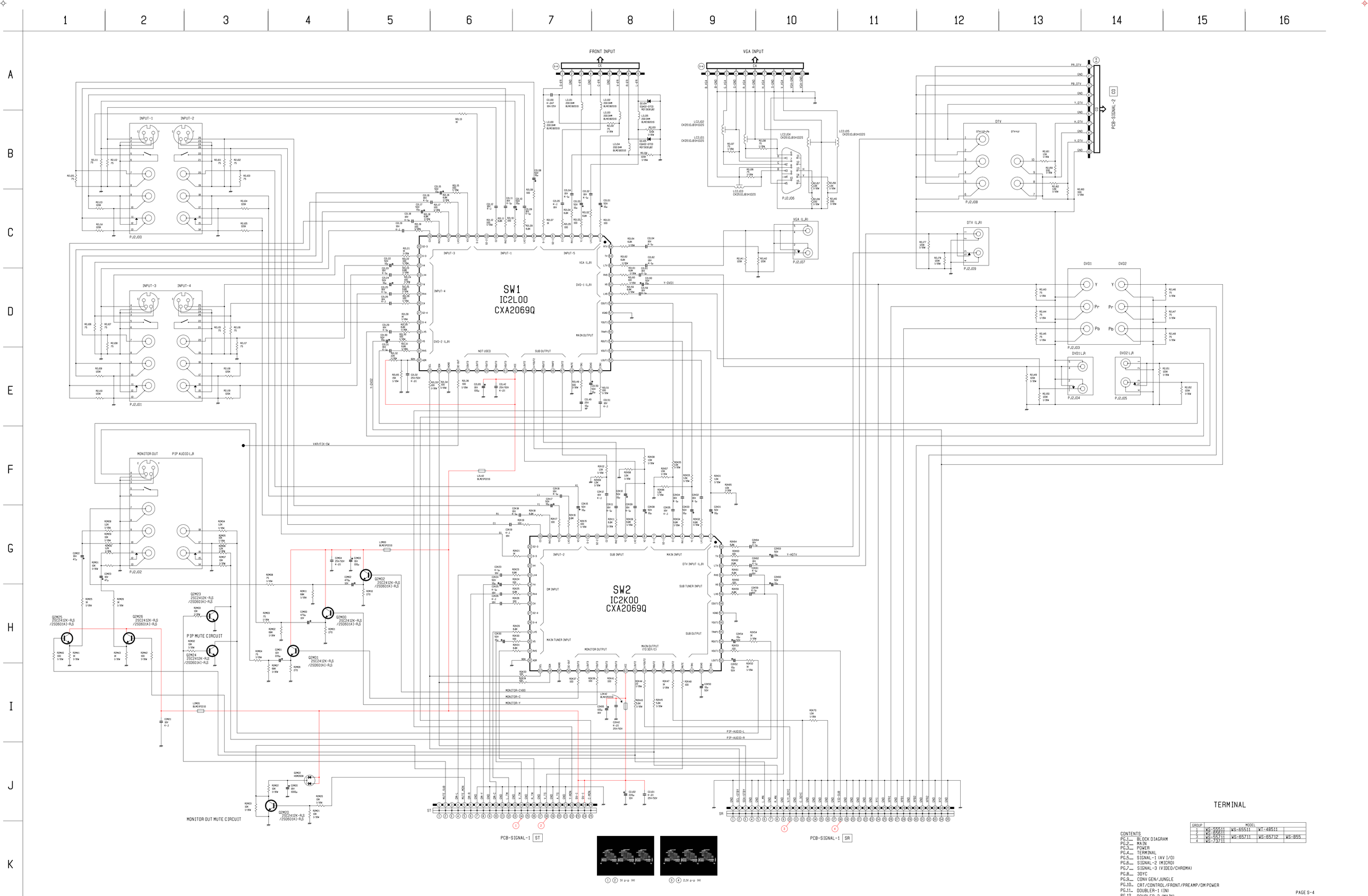

CONTENTS

PG.1.... BLOCK DIAGRAM
PG.2.... MAIN
PG.3.... POWER
PG.4.... TERMINAL
PG.5.... SIGNAL-1 (AV I/O)
PG.6.... SIGNAL-2 (MICRO)
PG.7.... SIGNAL-3 (VIDEO/CHROMA)
PG.8.... 3DYC
PG.9.... CONV GEN/JUNGLE
PG.10.. CRT/CONTROL/FRONT/PREAMP/DM POWER
PG.11.. DOUBLER-1 (IN)
PG.12.. DOUBLER-2 (MAIN)
PG.13.. DOUBLER-3 (OUT)

GROUP	MODEL				
1	WS-55911	WS-65511	WT-48511		
2	WS-55921				
3	WS-55711	WS-65711	WS-65712	WS-855	
4	WS-72711				

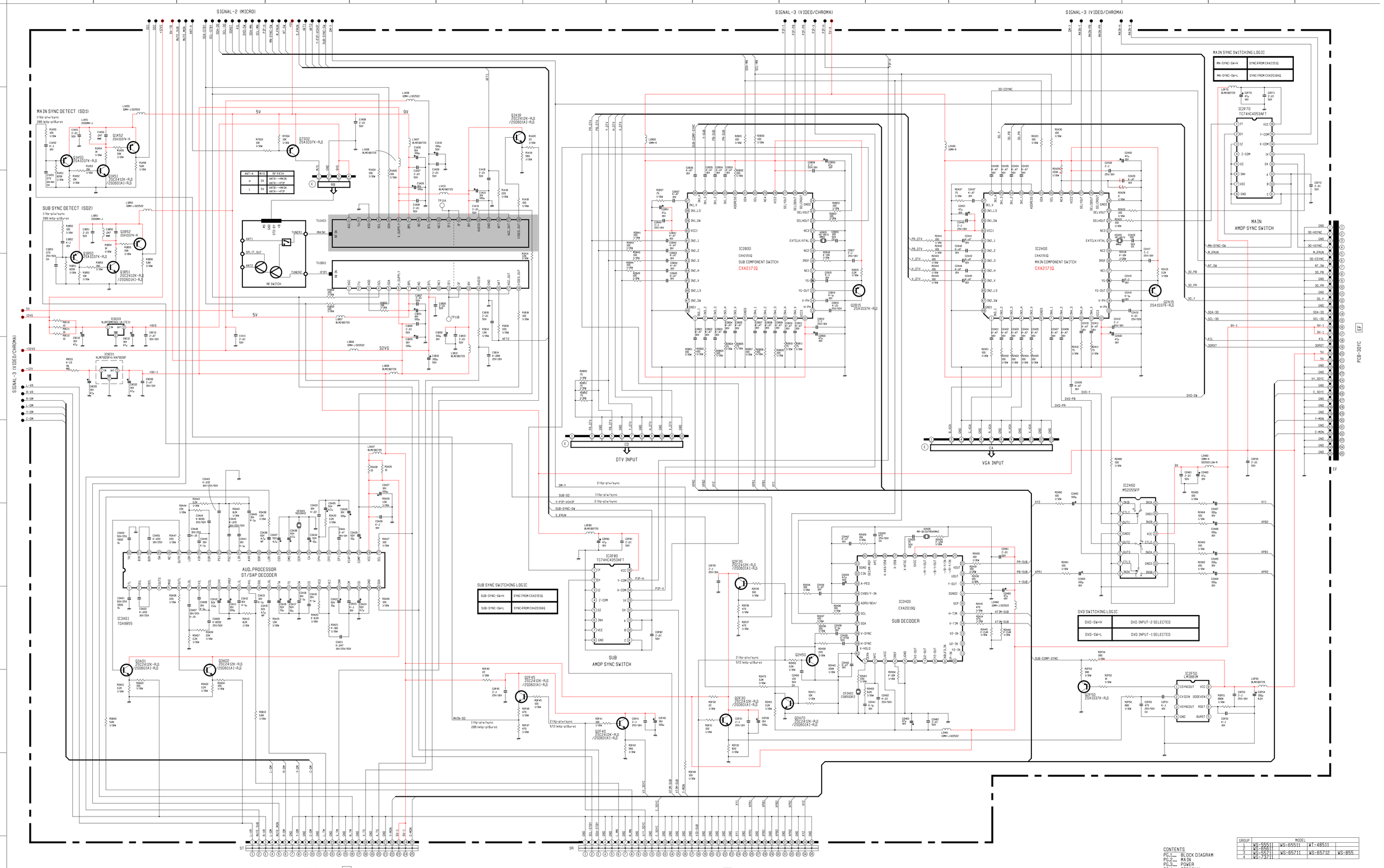

MAIN SYNC SWITCHING LOGIC

MN-SYNC-SW=H	SYNC FROM CXA2151Q
MN-SYNC-SW=L	SYNC FROM CXA2019AQ

SUB SYNC SWITCHING LOGIC

SUB-SYNC-SW=H	SYNC FROM CXA2151Q
SUB-SYNC-SW=L	SYNC FROM CXA2019AQ

DVD SWITCHING LOGIC

DVD-SW=H	DVD INPUT-2 SELECTED
DVD-SW=L	DVD INPUT-1 SELECTED

GROUP	MODEL				
1	WS-55511	WS-65511	WT-48511		
2	WS-55611				
3	WS-55711	WS-65711	WS-65712	WS-855	
4	WS-73711				

CONTENTS

PG.1.... BLOCK DIAGRAM
PG.2.... MAIN POWER
PG.3.... TERMINAL
PG.4.... SIGNAL-1 (AV I/O)
PG.5.... SIGNAL-2 (MICRO)
PG.6.... SIGNAL-3 (VIDEO/CHROMA)
PG.7.... 3DYC
PG.8.... CONV GEN/JUNGLE
PG.9.... CRT/CONTROL/FRONT/PREAMP/DM POWER
PG.10.. DOUBLER-1 (IN)
PG.11.. DOUBLER-2 (MAIN)
PG.12.. DOUBLER-3 (OUT)

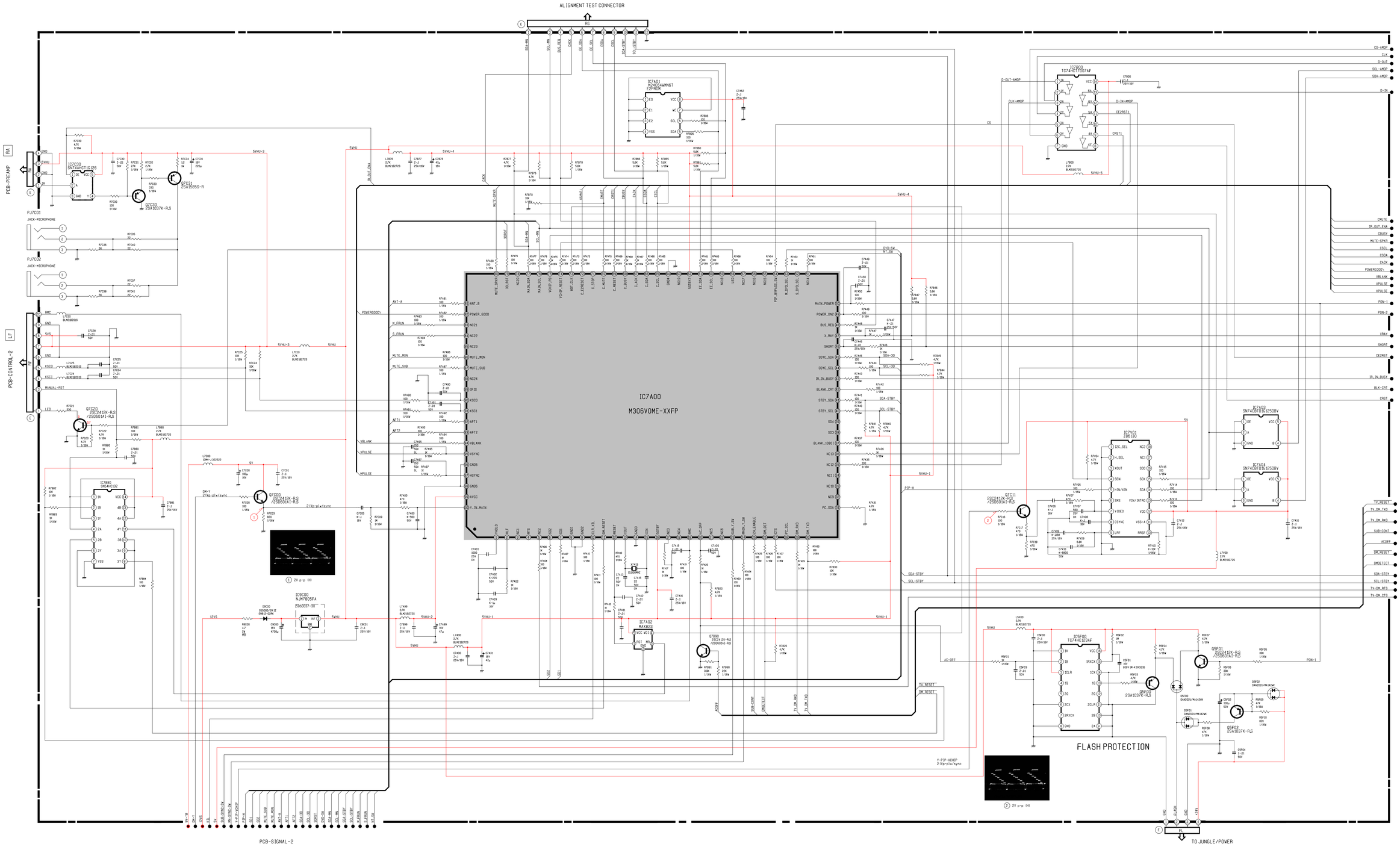

CONTENTS

PG.1..... BLOCK DIAGRAM
PG.2..... MAIN
PG.3..... POWER
PG.4..... TERMINAL
PG.5..... SIGNAL-1 (AV I/O)
PG.6..... SIGNAL-2 (MICRO)
PG.7..... SIGNAL-3 (VIDEO/CHROMA)
PG.8..... 3DYC
PG.9..... CONV GEN/JUNGLE
PG.10.. CRT/CONTROL/FRONT/PREAMP/DM POWER
PG.11.. DOUBLER-1 (IN)
PG.12.. DOUBLER-2 (MAIN)
PG.13.. DOUBLER-3 (OUT)

GROUP	MODEL				
1	WS-55511	WS-65511	WT-48511		
2	WS-55611				
3	WS-55711	WS-65711	WS-65712	WS-855	
4	WS-73711				

* EXCEPT WHERE NOTED, ALL OPEN-ENDED CIRCUIT PATHS CONNECT TO THE SIGNAL-3 SCHEMATIC

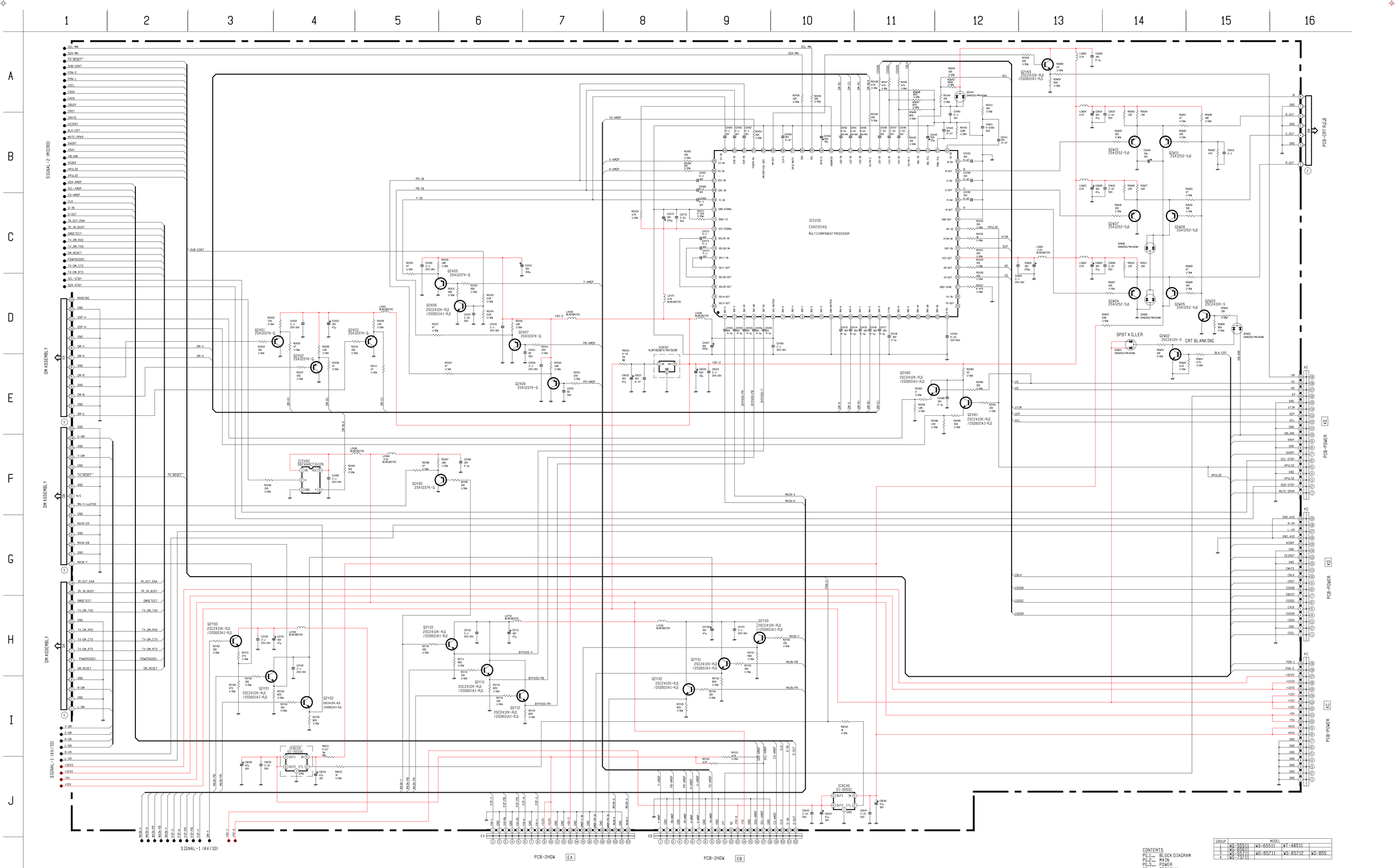

GROUP	MODEL				
1	WS-55511	WS-65511	WT-48511		
2	WS-65611				
3	WS-55711	WS-65711	WS-65712	WS-855	
4	WS-73711				

CONTENTS

PG.1.... BLOCK DIAGRAM
PG.2.... MAIN
PG.3.... POWER
PG.4.... TERMINAL
PG.5.... SIGNAL-1 (AV I/O)
PG.6.... SIGNAL-2 (MICRO)
PG.7.... SIGNAL-3 (VIDEO/CHROMA)
PG.8.... 3DYC
PG.9.... CONV GEN/JUNGLE
PG.10.. CRT/CONTROL/FRONT/PREAMP/DM POWER
PG.11.. DOUBLER-1 (IN)
PG.12.. DOUBLER-2 (MAIN)
PG.13.. DOUBLER-3 (OUT)

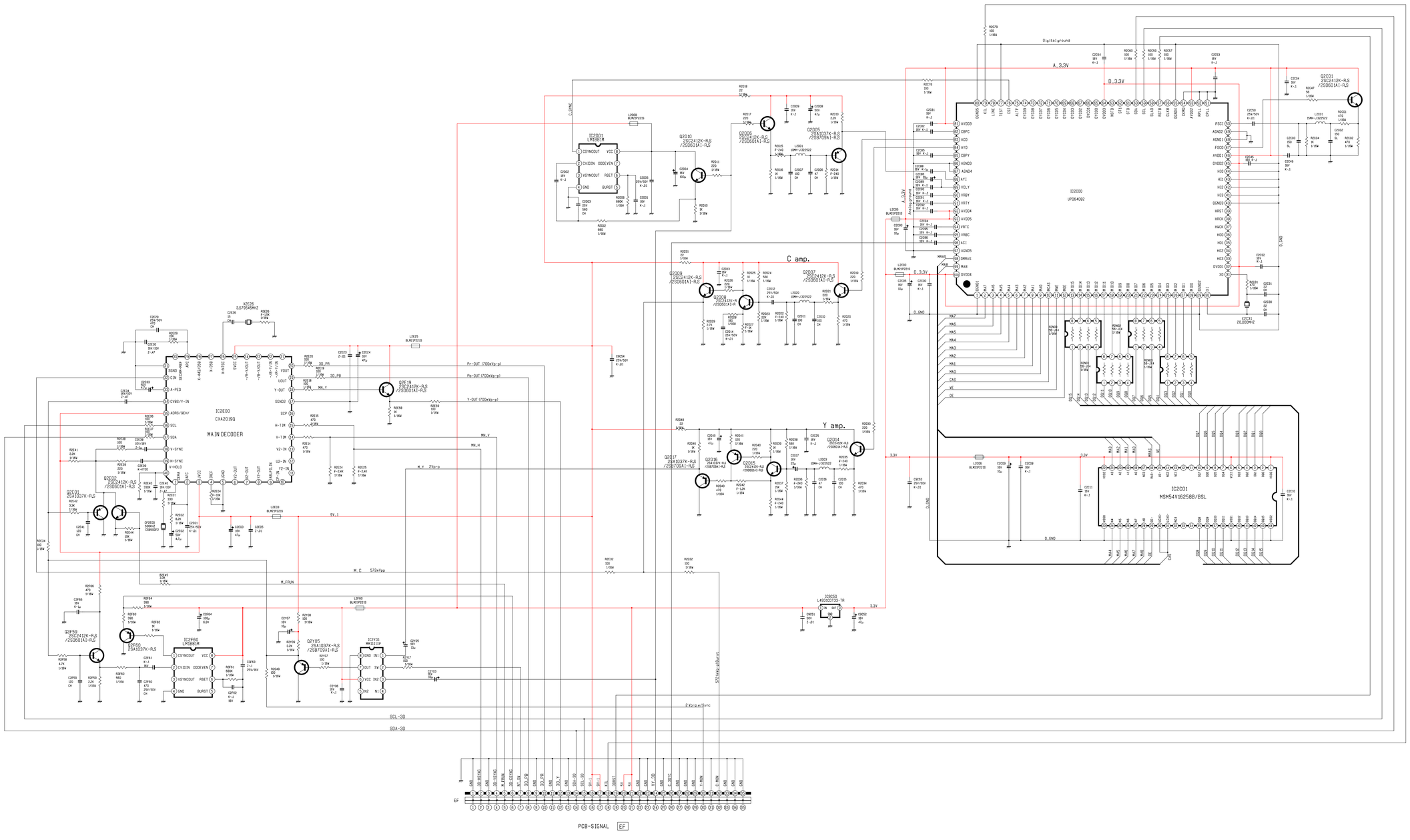

GROUP	MODEL			
1	WS-55511	WS-65511	WI-48511	
2	WS-55611			
3	WS-55711	WS-65711	WS-65712	WS-855
4	WS-73711			

CONTENTS

PG.1.... BLOCK DIAGRAM
PG.2.... MAIN
PG.3.... POWER
PG.4.... TERMINAL
PG.5.... SIGNAL-1 (AV I/O)
PG.6.... SIGNAL-2 (MICRO)
PG.7.... SIGNAL-3 (VIDEO/CHROMA)
PG.8.... 3DYC
PG.9.... CONV GEN/JUNGLE
PG.10.. CRT/CONTROL/FRONT/PREAMP/DM POWER
PG.11.. DOUBLER-1 (IN)
PG.12.. DOUBLER-2 (MAIN)
PG.13.. DOUBLER-3 (OUT)

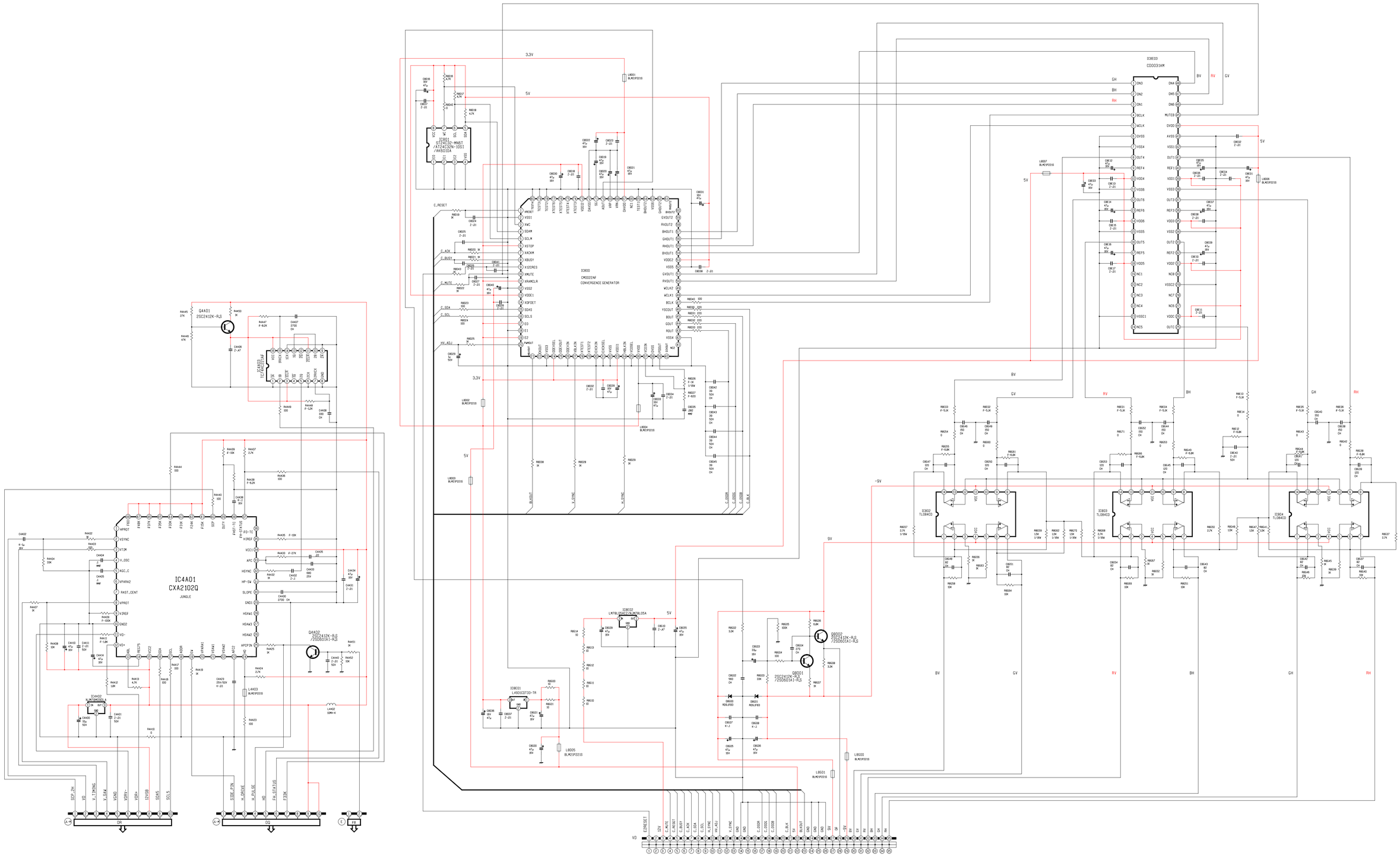

GROUP	MODEL			
1	WS-55611	WS-65511	WT-48511	
2	WS-55611			
3	WS-55711	WS-65711	WS-65712	WS-855
4	WS-73711			

CONTENTS

PG.1.... BLOCK DIAGRAM
PG.2.... MAIN
PG.3.... POWER
PG.4.... TERMINAL
PG.5.... SIGNAL-1 (AV I/O)
PG.6.... SIGNAL-2 (MICRO)
PG.7.... SIGNAL-3 (VIDEO/CHROMA)
PG.8.... 3DYC
PG.9.... CONV GEN/JUNGLE
PG.10.. CRT/CONTROL/FRONT/PREAMP/DM POWER
PG.11.. DOUBLER-1 (IN)
PG.12.. DOUBLER-2 (MAIN)
PG.13.. DOUBLER-3 (OUT)

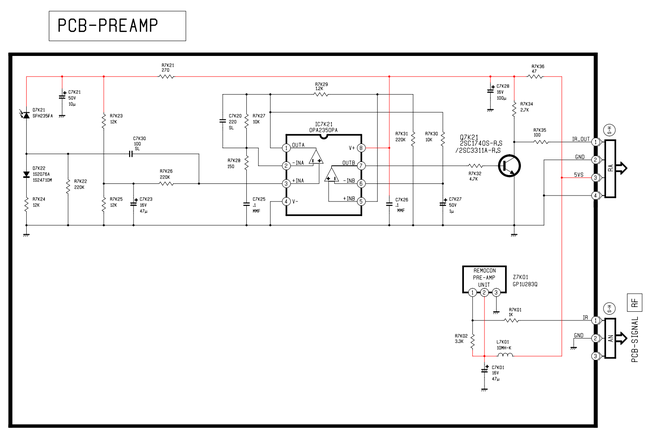

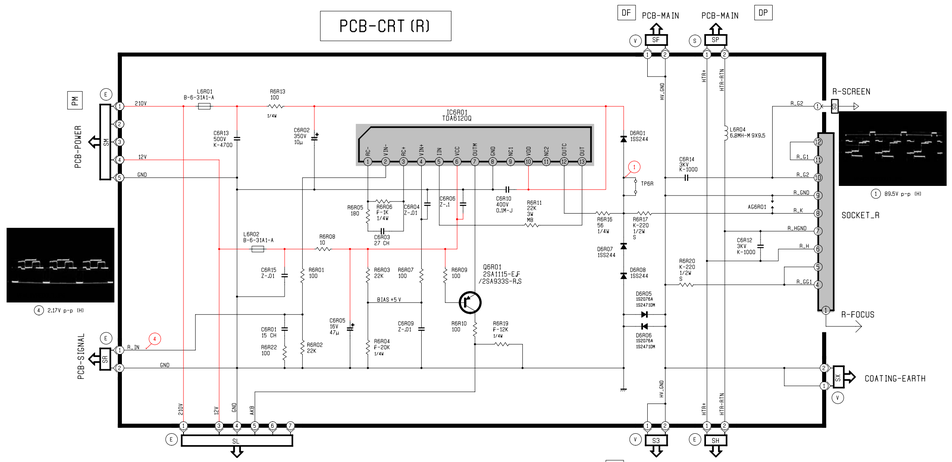

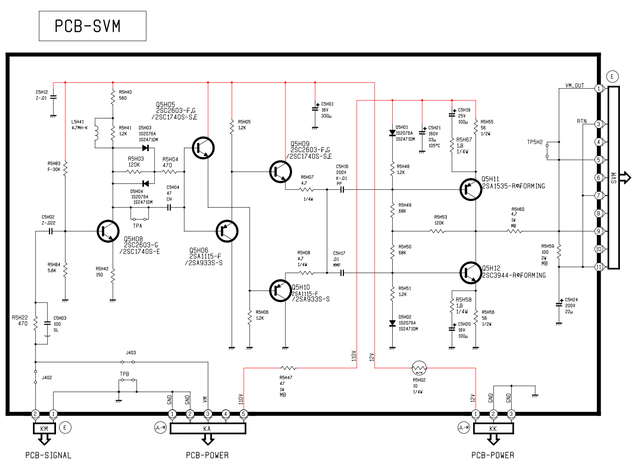

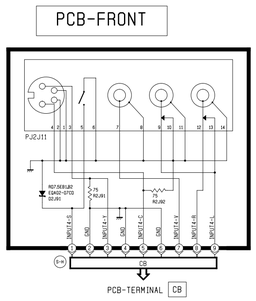

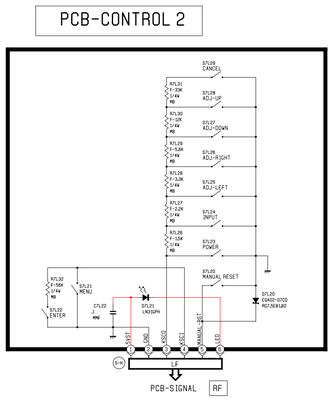

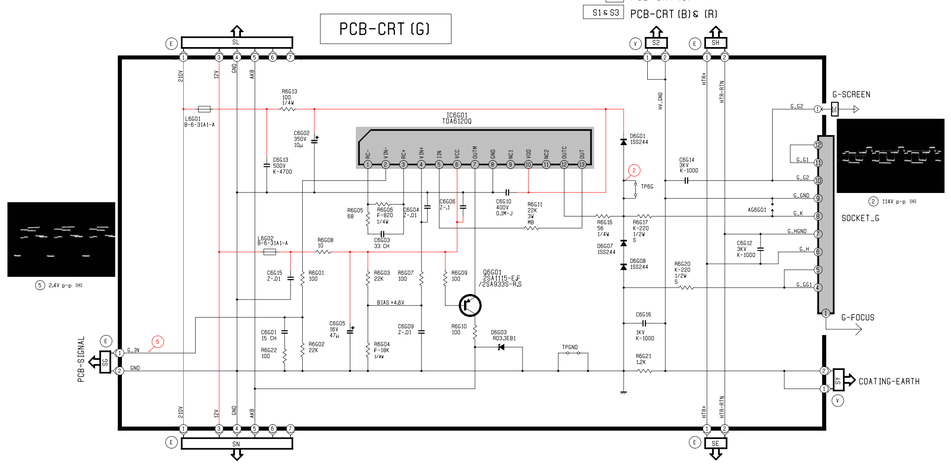

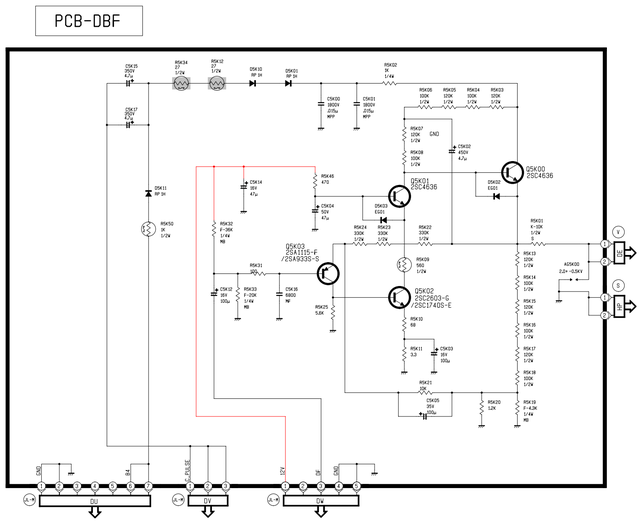

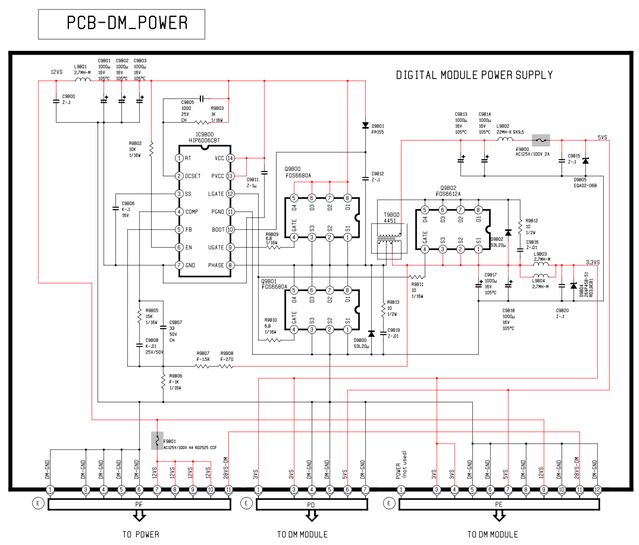

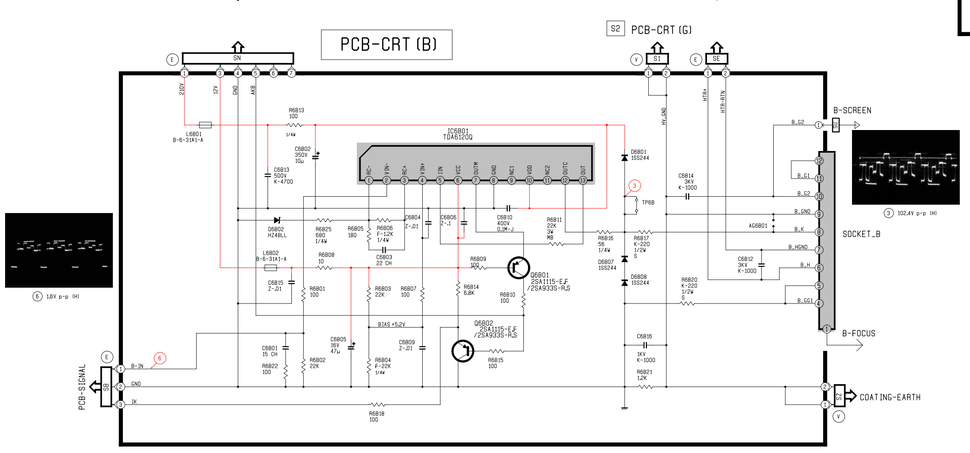

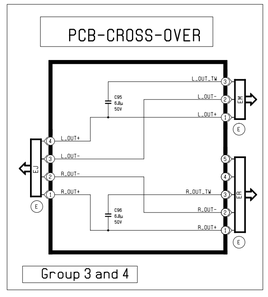

GROUP	MODEL				
1	WS-55511	WS-65511	WT-48511		
2	WS-56611				
3	WS-55711	WS-65711	WS-65712	WS-855	
4	WS-73711				

CONTENTS

PG.1..... BLOCK DIAGRAM
PG.2..... MAIN
PG.3..... POWER
PG.4..... TERMINAL
PG.5..... SIGNAL-1 (AV I/O)
PG.6..... SIGNAL-2 (MICRO)
PG.7..... SIGNAL-3 (VIDEO/CHROMA)
PG.8..... 3DYC
PG.9..... CONV GEN/JUNGLE
PG.10... CRT/CONTROL/FRONT/PREAMP/DM POWER
PG.11... DOUBLER-1 (IN)
PG.12... DOUBLER-2 (MAIN)
PG.13... DOUBLER-3 (OUT)

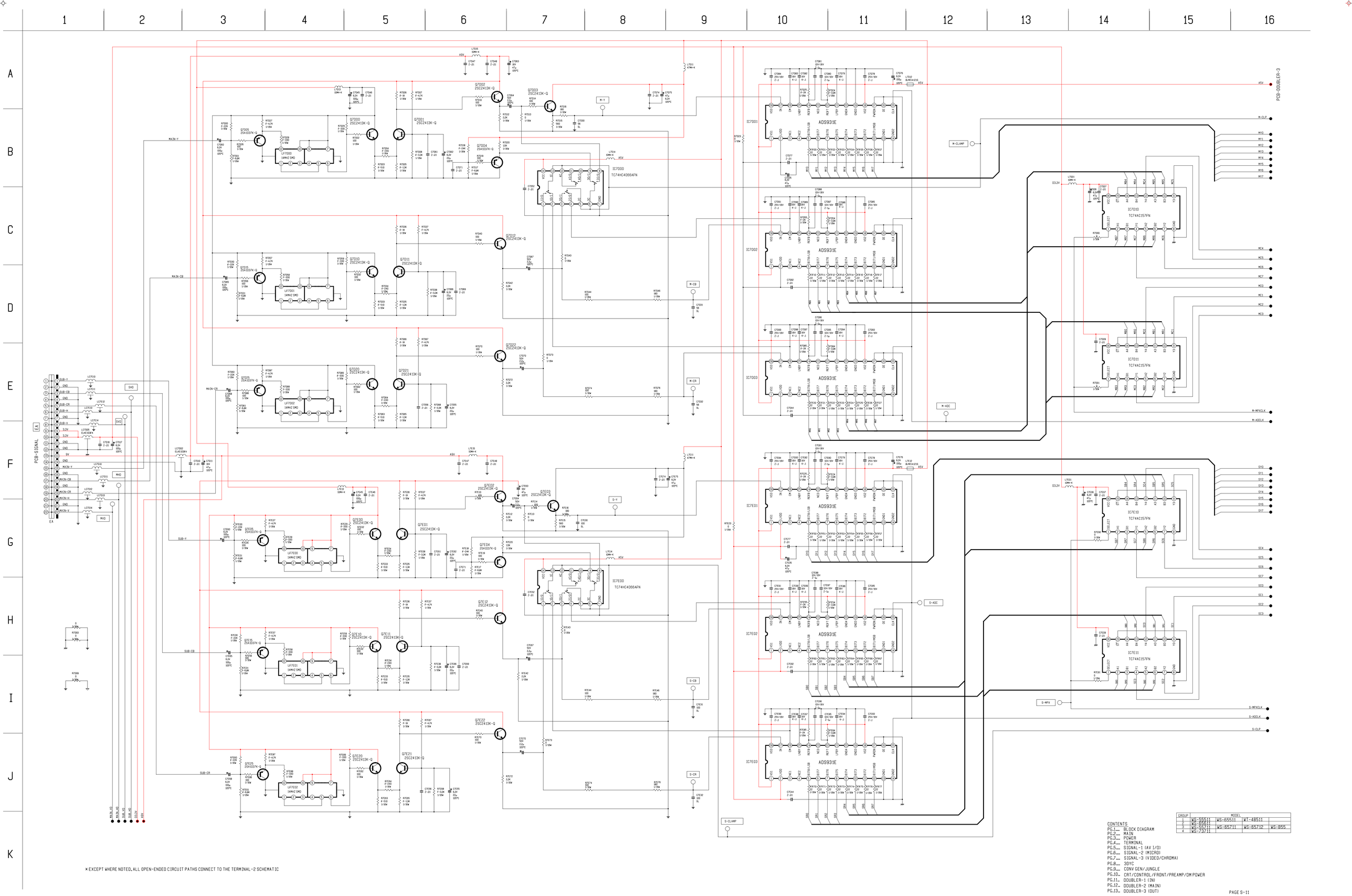

GROUP	MODEL				
1	WS-55511	WS-65511	WI-48511		
2	WS-65611				
3	WS-55711	WS-65711	WS-65712	WS-855	
4	WS-73711				

CONTENTS

PG.1..... BLOCK DIAGRAM
PG.2..... MAIN
PG.3..... POWER
PG.4..... TERMINAL
PG.5..... SIGNAL-1 (AV I/O)
PG.6..... SIGNAL-2 (MICRO)
PG.7..... SIGNAL-3 (VIDEO/CHROMA)
PG.8..... 3DYC
PG.9..... CONV GEN/JUNGLE
PG.10.... CRT/CONTROL/FRONT/PREAMP/DM POWER
PG.11.... DOUBLER-1 (IN)
PG.12.... DOUBLER-2 (MAIN)
PG.13.... DOUBLER-3 (OUT)

* EXCEPT WHERE NOTED, ALL OPEN-ENDED CIRCUIT PATHS CONNECT TO THE TERMINAL-2 SCHEMATIC

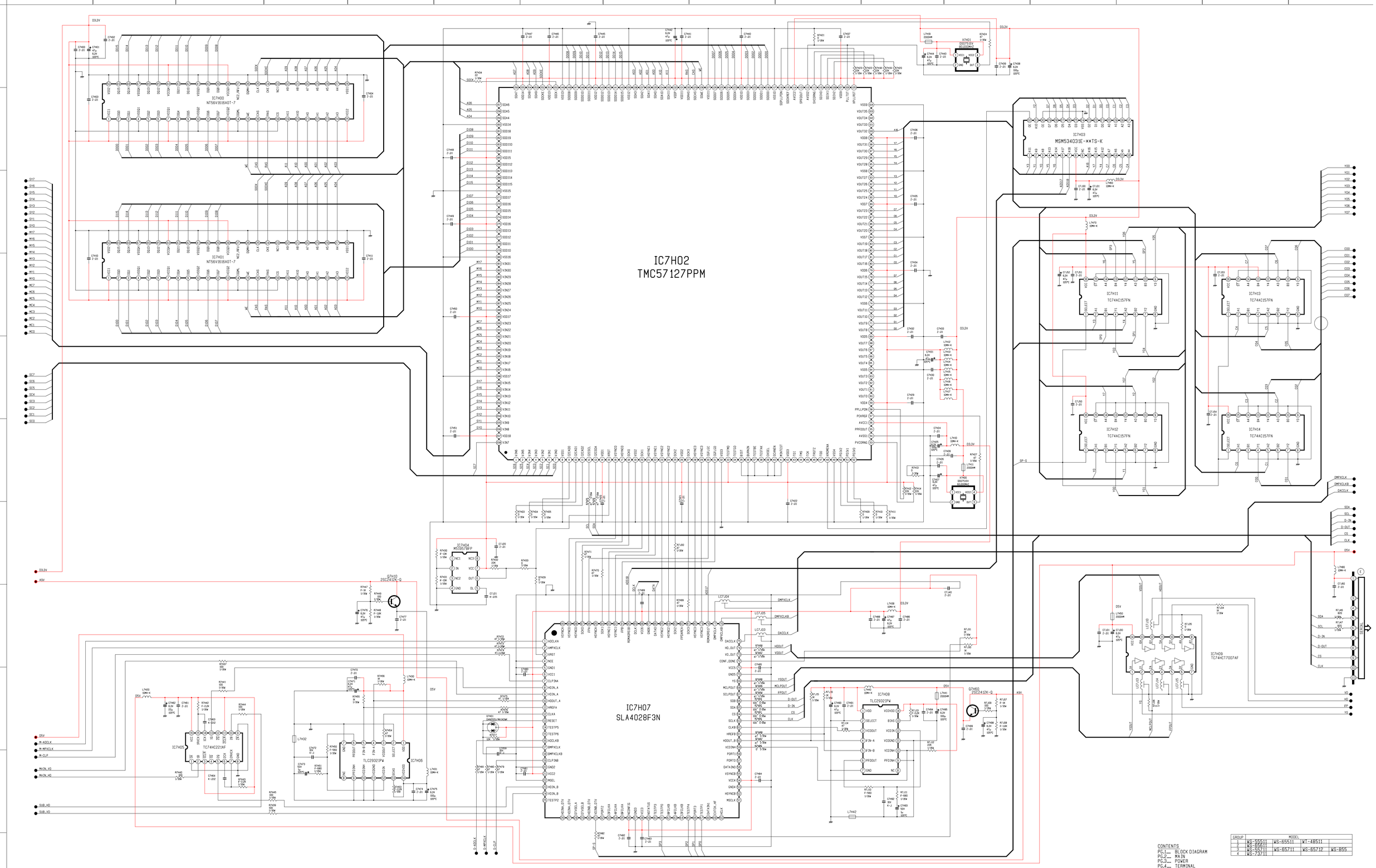

GROUP	MODEL				
1	WS-55511	WS-65511	WI-48511		
2	WS-65611				
3	WS-55711	WS-65711	WS-65712	WS-855	
4	WS-73711				

CONTENTS

PG.1..... BLOCK DIAGRAM
PG.2..... MAIN
PG.3..... POWER
PG.4..... TERMINAL
PG.5..... SIGNAL-1 (AV I/O)
PG.6..... SIGNAL-2 (MICRO)
PG.7..... SIGNAL-3 (VIDEO/CHROMA)
PG.8..... 3DYC
PG.9..... CONV GEN/JUNGLE
PG.10.... CRT/CONTROL/FRONT/PREAMP/DM POWER
PG.11.... DOUBLER-1 (IN)
PG.12.... DOUBLER-2 (MAIN)
PG.13.... DOUBLER-3 (OUT)

* EXCEPT WHERE NOTED, ALL OPEN-ENDED CIRCUIT PATHS CONNECT TO THE DOUBLER-1 SCHEMATIC

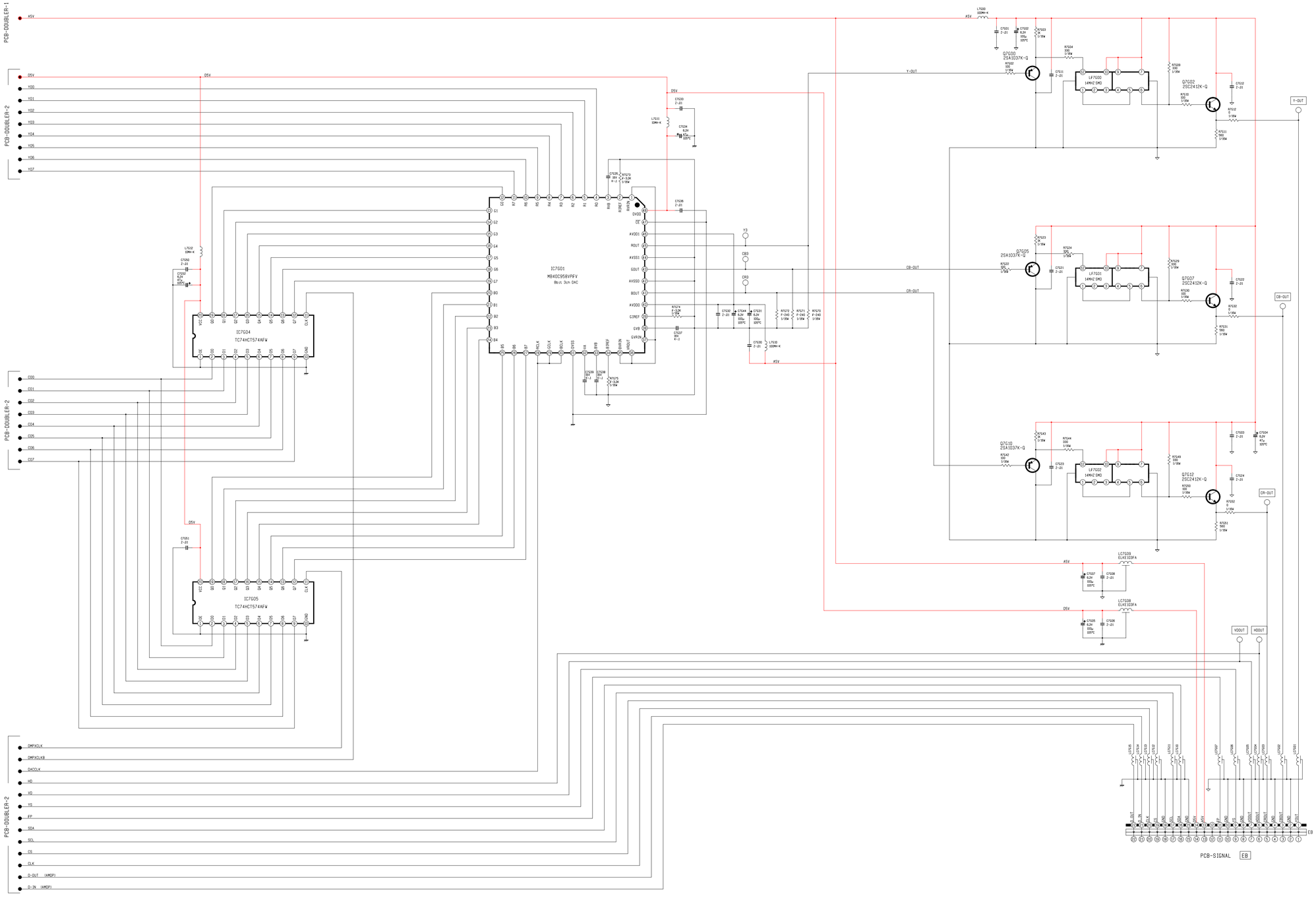

GROUP	MODEL			
1	WS-55511	WS-65511	WT-4851I	
2	WS-65611			
3	WS-5711	WS-65711	WS-65712	WS-855
4	WS-7371I			

CONTENTS

PG.1.... BLOCK DIAGRAM
PG.2.... MAIN
PG.3.... POWER
PG.4.... TERMINAL
PG.5.... SIGNAL-1 (AV I/O)
PG.6.... SIGNAL-2 (MICRO)
PG.7.... SIGNAL-3 (VIDEO/CHROMA)
PG.8.... 3DYC
PG.9.... CONV GEN/JUNGLE
PG.10.. CRT/CONTROL/FRONT/PREAMP/DM POWER
PG.11.. DOUBLER-1 (IN)
PG.12.. DOUBLER-2 (MAIN)
PG.13.. DOUBLER-3 (OUT)